Wiring Diagram	N/A	REPAIR PARTS LIST #759	Size	4000 Watts
Schematic	N/A		Drive	Direct
Generator Parts Unassembled	61965-2		Type	Two Pole
Complete Unit Part #	62204		Unit Model #	4PTH-3M/J10

DESCRIPTION	PART #	QTY.
Armature (less bearing)	62203-1	1
Armature Bearing	55223	1
Armature thru Bolt	23197-7	1
Fan Assy.	55101	1
Fan Washer	23558	1
Fan Lockwasher	55224	1
Fan Nut	23605	1
Field Coil	61960	1
Field Coil	61960-1	1
Shell & Bracket Assy.	62164	1
Pole Shoe	24851	2
Pole Shoe Retainer	24849	2
Engine Adapter Bracket	62188	1
Adapter Bracket Screw	55576	4
End Cover Assy.	55251	1
End Cover Receptacle	53636	2
End Cover Receptacle (230V)	55253	1
Brush Rack Assy.	62117	1
Brush Rack	62116	1
A.C. Brush	23607	6
A.C. Brush Holder	59690	6
A.C. Condenser	41221	2
Barrier Spacer	59688	10
Cradle	62121	1
Rubber Feet	23770	4
Cradle Adapter	62201	1

Engine Make Tecumseh Model # HM80 Part # 62202

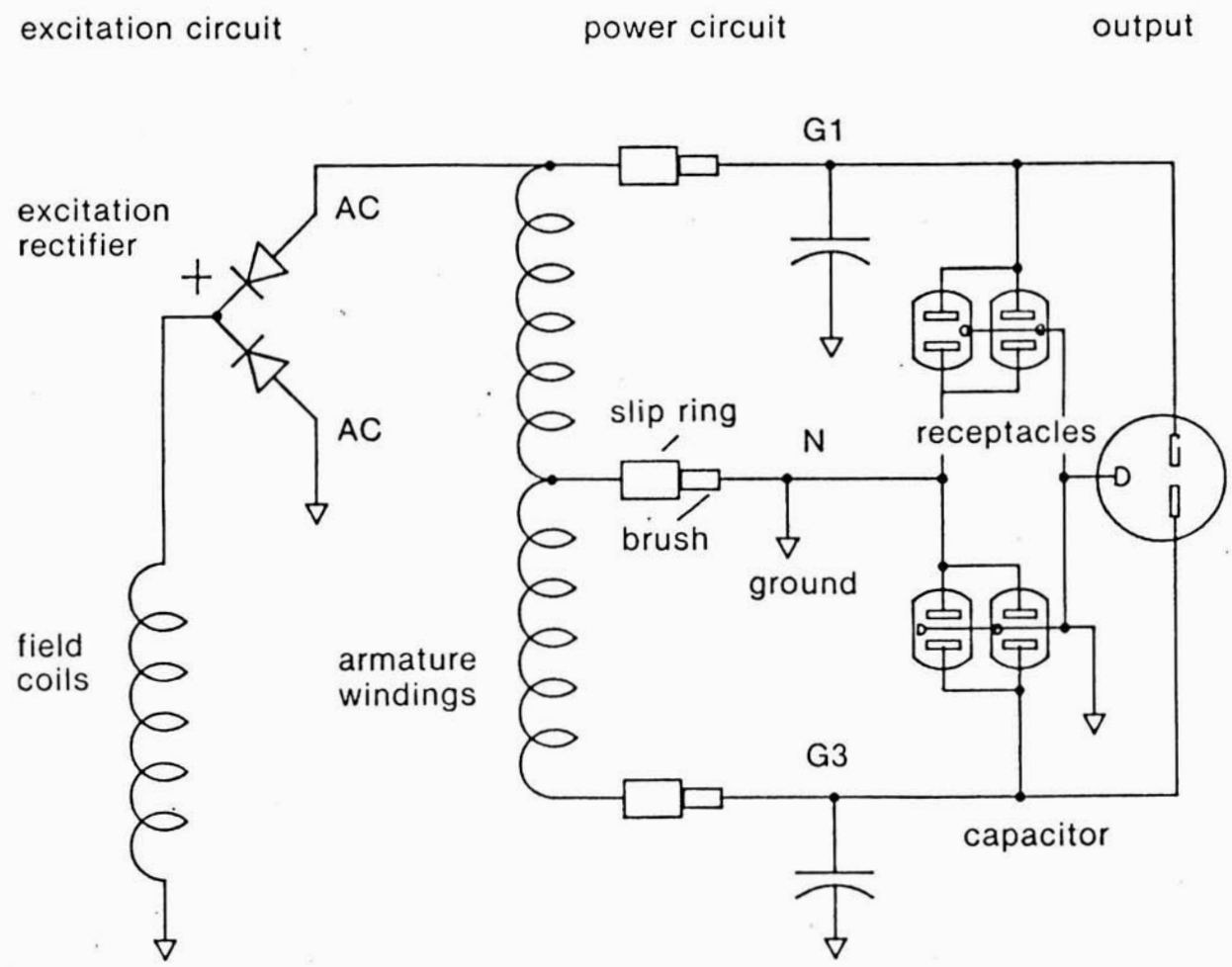

SCHEMATIC WIRING DIAGRAM

Reference 1