WINPOWER CORPORATION

TRACTOR DRIVEN ALTERNATOR
100,000 WATTS* A.C. 1800 R.P.M.

PARTS LIST DATE RELEASED 3/8/78

REF.	PART DESCRIPTION	Model 100/60PTCM Type 2 PART NO.	REQ.	Model 100/60PTDM Type 2 PART NO.	REQ.	Model 100/60PTJM Type 2 PART NO.	REQ.	Model 100/60PTLM Type 2 PART NO.	REQ.	Model 100/60PTNM Type 2 PART NO.	REQ.	Model 100/60PTPM Type 2		Model 100/60PTTM Type 2	
1.	Bearing Retainer	S-6797-1	1												
2	Shim	S-6289-3 thru S-6289-8	2ea.												
3	Bearing	D-49	1												
4	Bearing Spacer	S-6872	1												
5	Brush Gear	G-6389	1												
6	Brush	Y-51	2												
7	Brush Ring	J-558	1												
8	Bearing Housing	I-850-3	1												
9	Rev. Electrical Assy.	G-5805-14	1												
10	Fan Hub	I-849-2	1												
11	Stator & Frame Assy.	G-5734-14	1												
12	Fan Assembly	G-6064-1	1												
13	Bearing	D-49	1												
14	Drive End Casting	I-848	1												
15	Front Retainer Plate	I-769	1												
16	Oil Seal	TE-901	1												
17	Gasket	X-179	1												
18	Bearing Cup	D-9-1	1												
19	Cover	I-768	1												
20	Gasket	X-180	1												
21	Pinion	S-7404-5	1												
22	Oil Seal	TE-902	1												
23	Gasket	X-178	1												
24	End Plate	I-770	1												
25	Gasket	X-178	1												
26	Housing	I-847	1												
27	Breather Cap	10801	1												
28	Key	S-2056-30	1												
29	Bearing	D-10	1												
30	Spacer	S-7340-1	1												
31	Gear	S-7405-5	1												
32	Shaft	N-608	1												
33	Bearing	D-9	1												
34	Drive Shaft Assembly	G-6301-1	1												
N.S.	Panel Assembly	G-6387	1												
N.S.	PTO Guard	G-6467	1												
N.S.	Circuit Breaker Element	EE-2803-8	1	EE-2803-7	1	EE-2803-6	1	EE-2803-2	1	EE-2803-3	1	EE-2803-4	1	EE-2803-6	1

Parts Drawing IE-9689
Wiring Diagram IC-6946

NOTE--Part numbers and quantities are the same in all columns, but for the exceptions.

E-9689

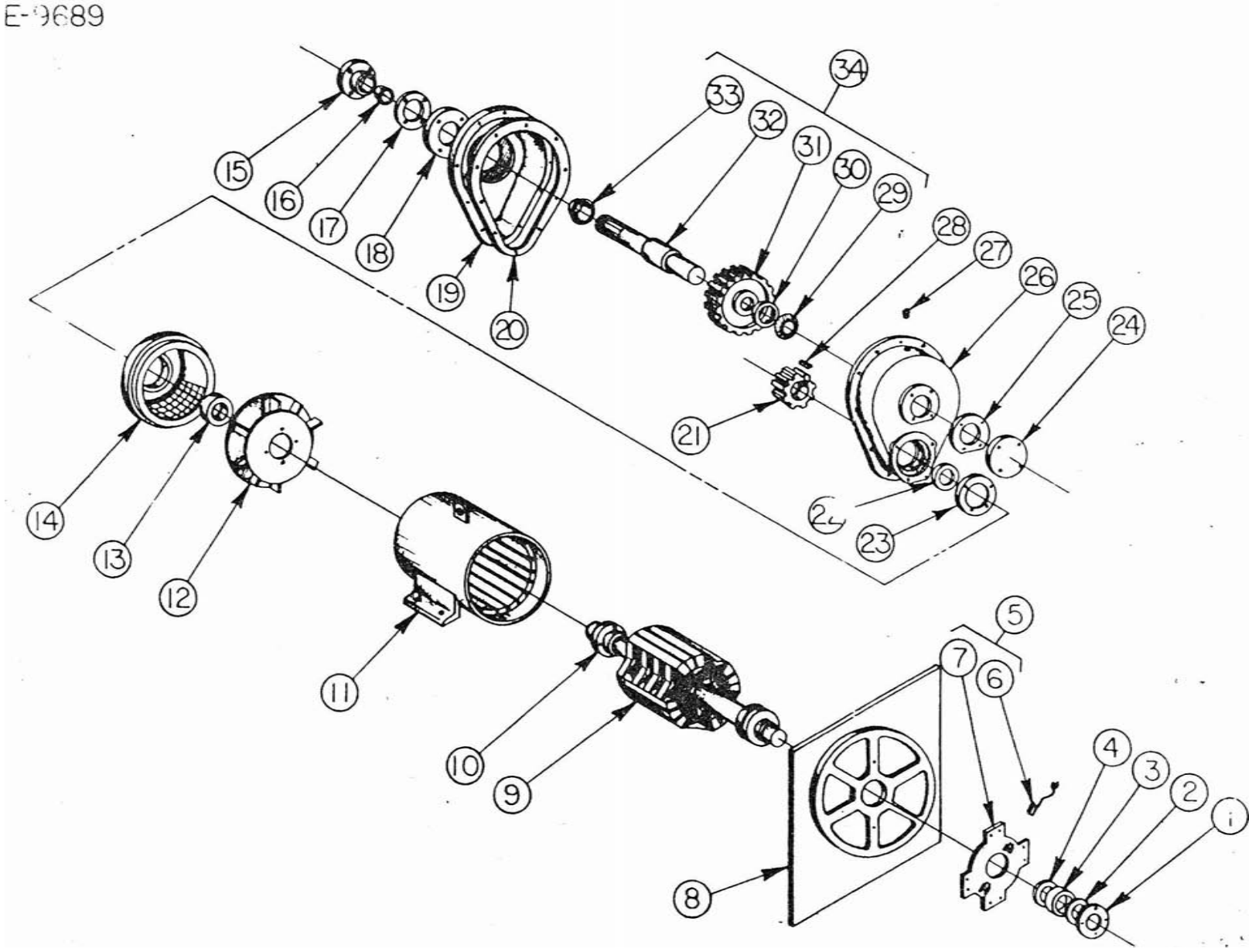
34
33
32
31
30
29
28
27
26
25
24
15
16
17
18
19
20
21
22
23
14
13
12
11
10
9
8
7
6
5
4
3
2
1

E-9689

WINPOWER CORPORATION

TRACTOR DRIVEN ALTERNATOR

100,000 WATTS* A.C. 1800 R.P.M.

PARTS LIST DATE RELEASED 3/8/78

		PANEL ASSEMBLY G-6387	
REF.	PART DESCRIPTION	PART NUMBER	REQ'D
1	Panel Bottom	S-7572-1	1
2	Panel - Front Cover	S-7576	1
3	Panel - Front Top	G-6336-1	1
4	Load Plug - Orange	EE-1337-4	1
5	Load Plug - Red	EE-1337-1	1
6	Load Plug - White	EE-1343	1
7	Load Plug - Black	EE-1337-2	1
8	Ground Lug	EE-1671-2	1
9	Nameplate 240 Volt	Z-1045-9	1
10	Nameplate 120 Volt	Z-1045-5	1
11	Panel Left Side	S-7570-2	1
12	Rectifier	EE-2214	1
13	Insulator	EE-646-4	1
14	Terminal Block	EE-646-1	1
15	Panel Top	S-7590-1	1
16	Meter Panel Weldment	G-6335-2	1
17	Voltmeter 0-500 Volts	VM-35	1
18	Meter Mount	J-193	1
19	Circuit Breaker	EE-2802	1
19A	Compression Lug	EE-2804	6
20	Panel Right Side	S-7569-1	1
21	Circuit Breaker - 15 Ampere-1Pole	EE-1830	1
22	Mounting Plate	S-5027-1	1
23	Receptacle Range - 50 Ampere	EE-399	1
24	Receptacle Duplex	EE-323	1
25	Circuit Breaker - 50 Ampere-2 Pole	EE-1805	1
26	Transformer	EE-2036	1
27	Capacitor	EE-1539	1
28	Ground Stud	S-7656	1
29	Choke	EE-2012	2
30	Not Applicable		

Parts Drawing IE-9690

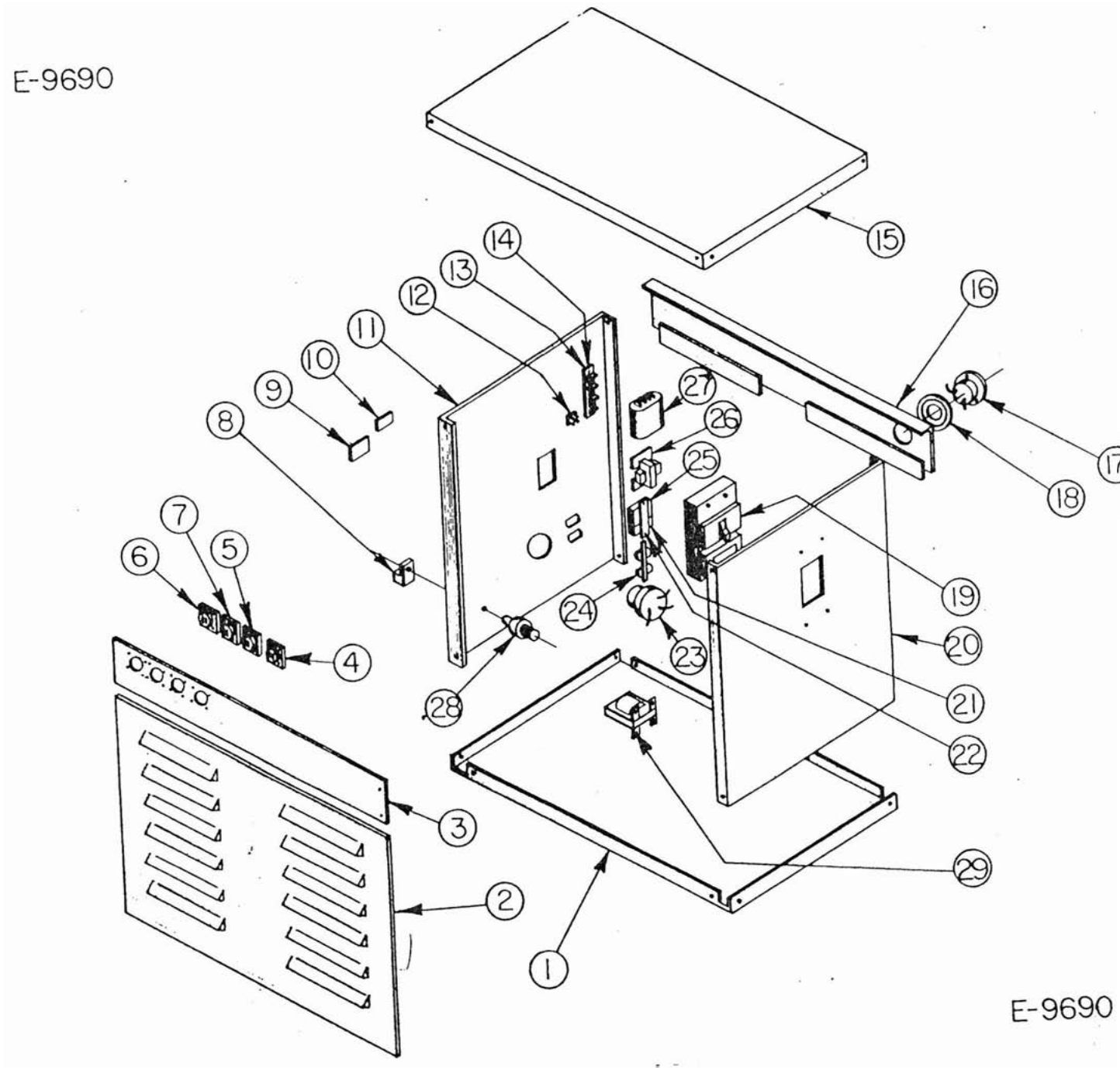
E-9690
1
2
3
4
5
6
7
8
9
10
11
12
13
14
15
16
17
18
19
20
21
22
23
24
25
26
27
28
29
E-9690

CONNECTION DIAGRAM

120/240V. 1Φ

NOTE:
1. CIRCUIT BREAKER REQUIRES TRIP ELEMENT EE-2803-8
2. SEE SHEET 2 FOR CHOKE AND TRANSFORMER SECONDARY CONNECTIONS

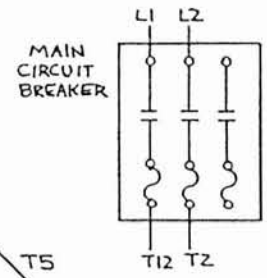

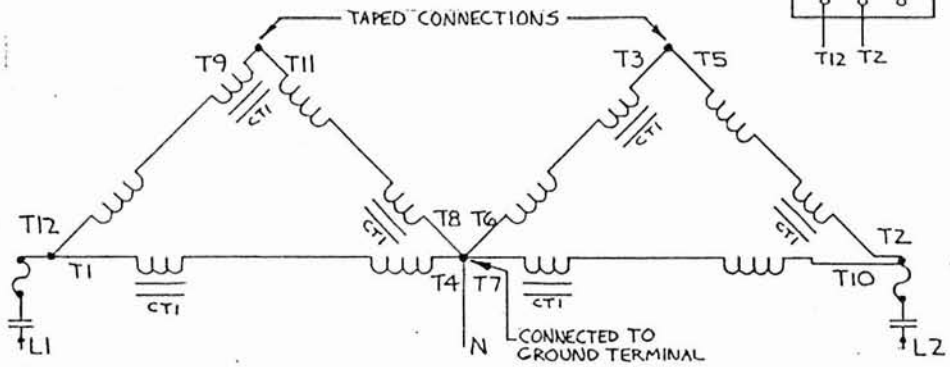

120/240V 3Φ

NOTE:
1. CIRCUIT BREAKER REQUIRES TRIP ELEMENT EE-2803-6.
2. SEE SHEET 2 FOR CHOKE AND TRANSFORMER SECONDARY CONNECTION.

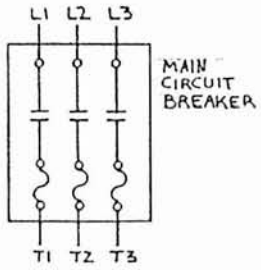

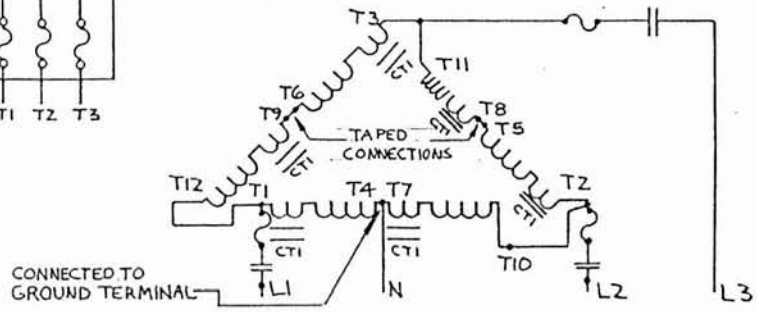

120/208V 3Φ

NOTE: 1. SEE SHEET 2. FOR TRANSFORMER SECONDARY AND CHOKE CONNECTIONS.
2. CIRCUIT BREAKER REQUIRES TRIP ELEMENT EE-2803-7.

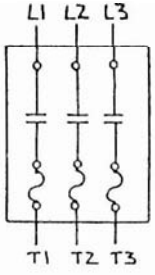

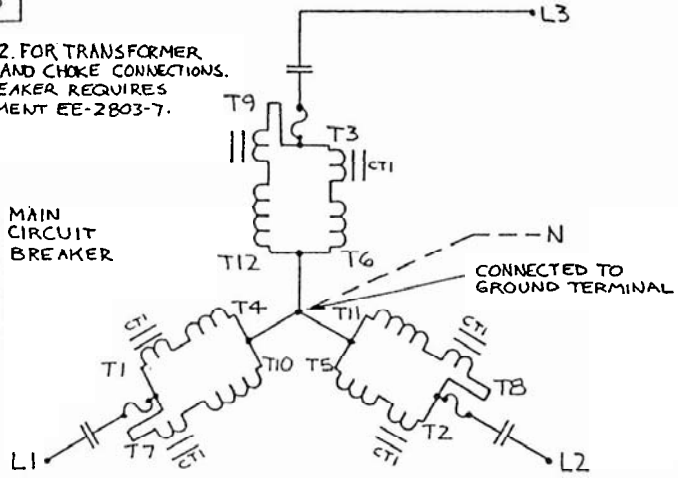

277/480V. 3Φ

NOTE:
1. SEE SHEET 2 FOR CHOKE AND TRANSFORMER SECONDARY CONNECTIONS
2. CIRCUIT BREAKER REQUIRES TRIP ELEMENT EE-2803-2

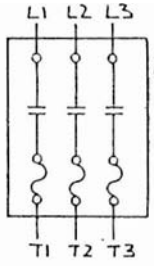

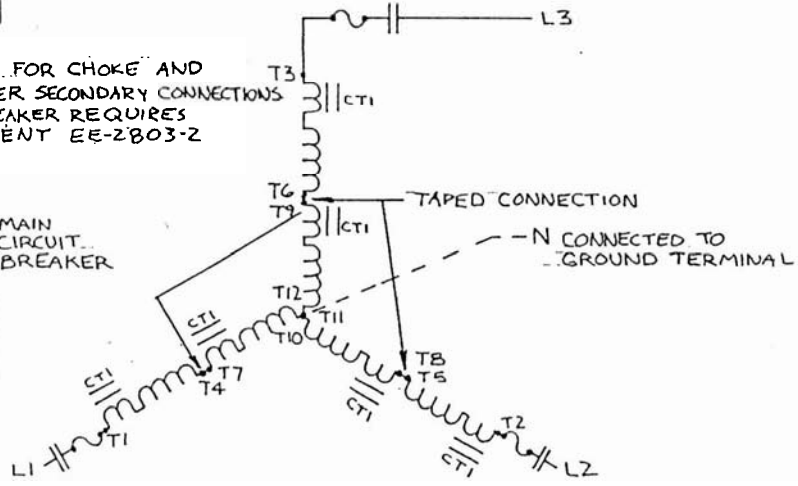

CHANGE	WAS ORIGINALLY	DATE	CHK'D	CHG. REQUEST			

TOLERANCE ON DIMENSIONS NOT OTHERWISE SPECIFIED: DECIMAL ±, FRACTIONAL ±, ANGULAR ±

REMOVE ALL BURRS, BREAK ALL SHARP, MACHINED EDGES

NO. REQ'D. _____ MICROFILM DATA

MATERIAL _____

SCHEMATIC & CONNECTION DIAGRAMS

SCALE ~ | MODEL NO. _____
DATE 6-7-78 | PART NO. IC-6946
DWN. ELJ | CHK'D. _____

WINPOWER CORPORATION
NEWTON, IOWA 50208

BARNES REPRODUCTIONS, INC.

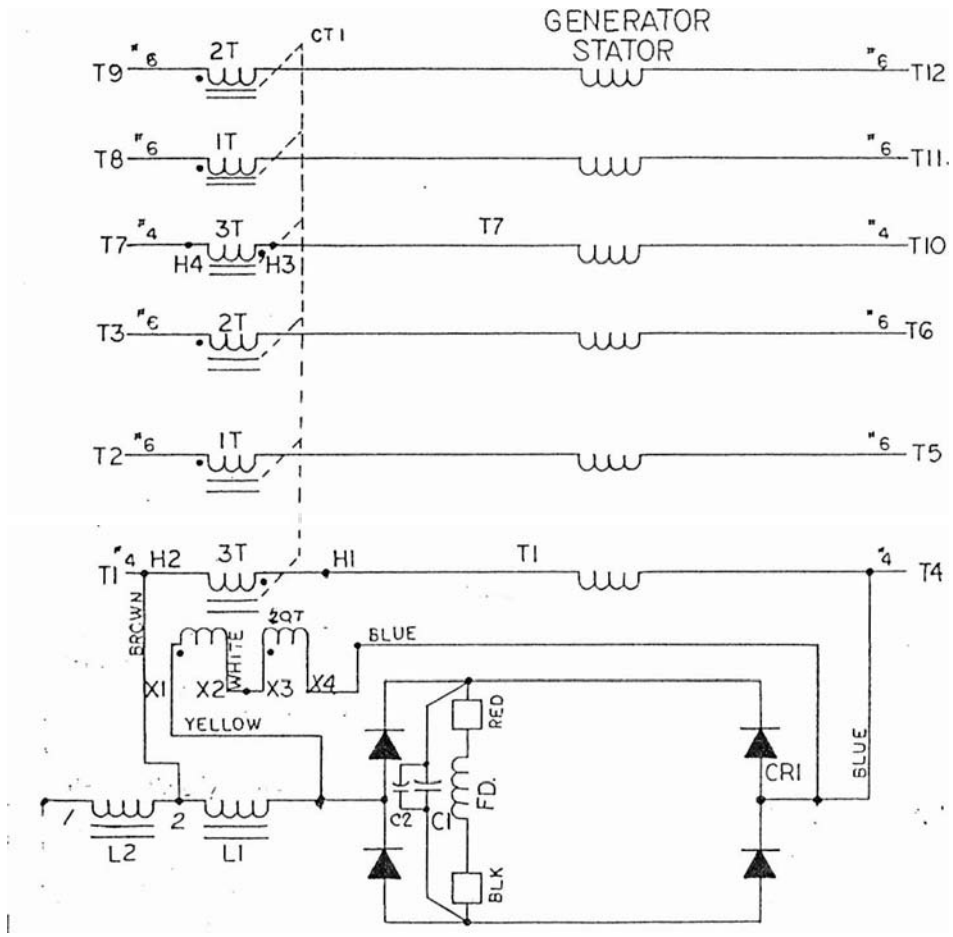

SCHEMATIC DIAGRAM

FIGURE 1

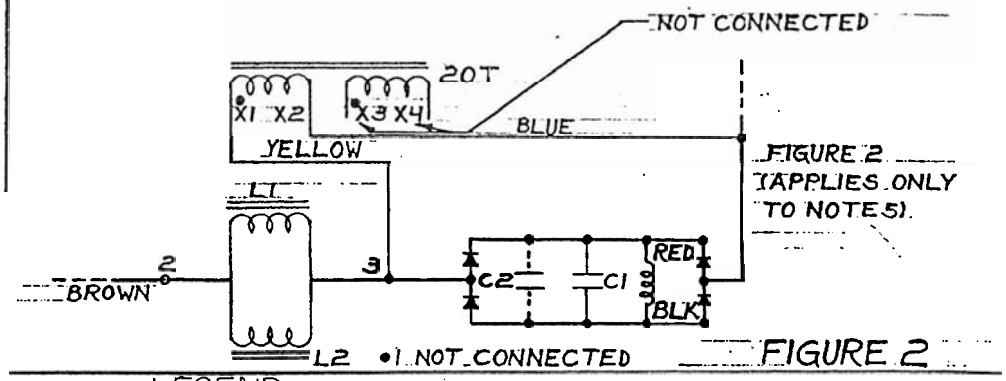

FIGURE 2

LEGEND

CR1	EE-2214	RECTIFIER ASSY.
C1,C2	EE-1539	CAPACITOR (SEE NOTE 6)
© CT1	EE-2036	TRANSFORMER
® L1,L2	EE-2012	CHOKE

CONNECTION NOTES

1. TRANSFORMER PRIMARY WINDINGS IN T1-T4 & T7-T10 ARE PART OF TRANSFORMER CT1.
2. TRANSFORMER PRIMARY WINDINGS IN T2-T5, T3-T6, T8-T11, & T9-T12 ARE STATOR LEADS (#6 LEAD WIRE) THREADED THRU TRANSFORMER.
3. TRANSFORMER SECONDARY WINDINGS X1-X2 ARE PART OF TRANSFORMER CT1.
4. TRANSFORMER SECONDARY WINDINGS X3-X4 20T NO.12 LEAD WIRE.
5. FOR 139/240 & 277/480 VOLT WYE CONNECTION REMOVE BLUE LEAD FROM X4 AND CONNECT TO X2. INSERT L2 INTO CIRCUIT BY MOVING LEAD FROM L2 ON 1 TO 3 ON TERMINAL BOARD. (SEE FIGURE 2 ABOVE)
6. IN SOME APPLICATIONS ONLY C1 WILL BE REQUIRED
7. THE APPROPRIATE CIRCUIT BREAKER TRIP ELEMENT FOR EACH VOLTAGE CONNECTION IS SHOWN ON SHEET 1

CHANGE	WAS ORIGINALLY	DATE	CHK'D.	CHG. REQUEST			
A	REVISE	1-2-80	G.D. REC	1-80			C1

TOLERANCE ON DIMENSIONS NOT OTHERWISE SPECIFIED: DECIMAL ±, FRACTIONAL ±, ANGULAR ±

REMOVE ALL BURRS, BREAK ALL SHARP, MACHINED EDGES

NO. REQ'D. MICROFILM DATA

MATERIAL

SCHEMATIC AND CONNECTION DIAGRAMS

SCALE NONE | MODEL NO.
DATE 2-28-78 | PART NO. IC-6946
DWN. KH | CHK'D.

WINPOWER CORPORATION
NEWTON, IOWA 50208

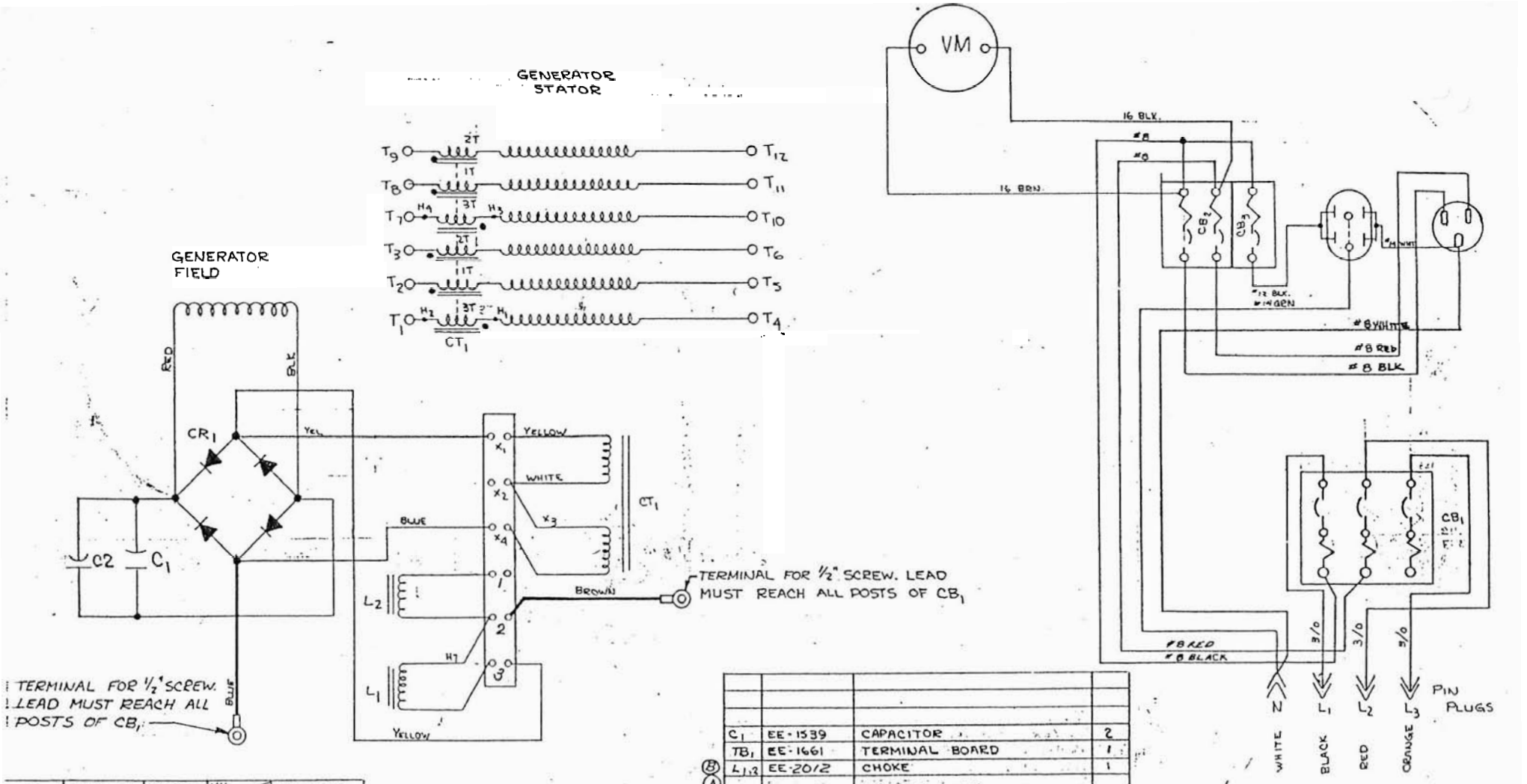

C	EE-2007	8-8-79	KH	KH	79-2298
B	EE-1978	8-8-79	KH	KH	79-2298
A	EE-2205	8-3-78	ELJ		1190-78
CHANGE	WAS ORIGINALLY	DATE	CHK'D.		CHG. REQUEST

TOLERANCE ON DIMENSIONS NOT OTHERWISE SPECIFIED: DECIMAL ± / FRACTIONAL ± / ANGULAR ±

REMOVE ALL BURRS BREAK ALL SHARP MACHINED EDGES

NO. REQ'D. _____ MICROFILM DATA

MATERIAL _____

REF	PART NO.	DESCRIPTION	QTY.
C1	EE-1539	CAPACITOR	2
TB1	EE-1661	TERMINAL BOARD	1
L1,2	EE-2012	CHOKE	1
CB3	EE-1830	CIRCUIT BREAKER	1
CB2	EE-1805	CIRCUIT BREAKER	1
CB1	EE-2802	CIRCUIT BREAKER FRAME	1
CT1	EE-2036	CURRENT XFORMER	1
VM	VM-20	VOLTMETER	1
CR1	EE-2214	RECTIFIER	1

WIRING DIAGRAM

SCALE ~ DATE 2-28-78 DWN. KH

MODEL NO. PART NO. IC-6946 CHK'D.

WINPOWER CORPORATION
NEWTON, IOWA 50208

Std. B. F. Co. N7640

SHT. 3 OF 3

IC-6946