64868-010

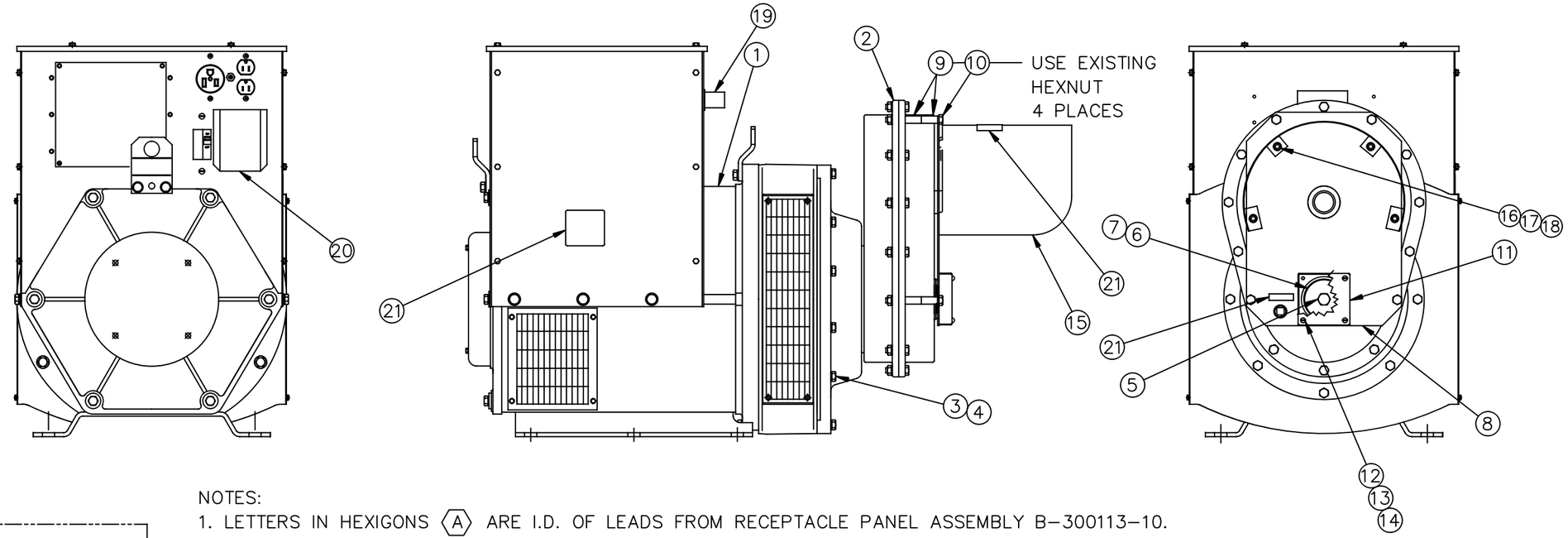

NOTES:

1. LETTERS IN HEXIGONS (A) ARE I.D. OF LEADS FROM RECEPTACLE PANEL ASSEMBLY B-300113-10.
2. LETTERS IN CIRCLES (A) ARE I.D. OF LEADS FROM CIRCUIT BREAKER ASSEMBLY B-300101-5.

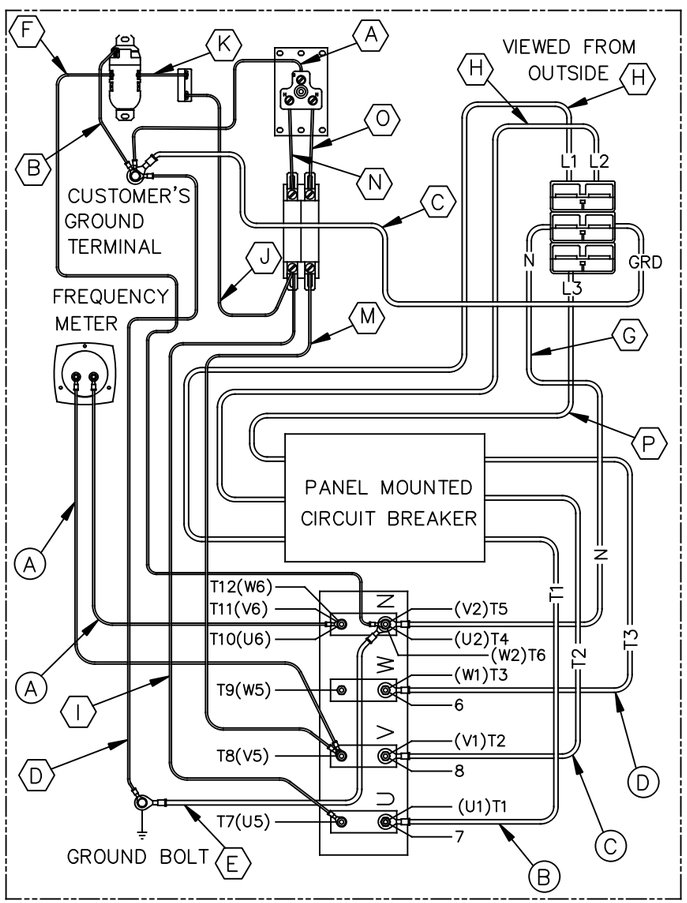

WIRING DIAGRAM (THREE PHASE "12 WIRE"; 120/208)

ITEM	PART NO	QTY	DESCRIPTION
28	AVR SX460	1	DECAL SX460
27	64914-000	16	M6 RETAINER NUT
26	1744-000	4	1/2-13 HEXNUT (SHIPPING)
25	21867-000	4	1/2 FLATWASHER (SHIPPING)
24	61603-005	4	1/2-13 X 2-1/2 CARRIAGE BOLT (SHIPPING)
23	BP-10099-3	1	PLUG KIT (SHIPPED LOOSE)
22	60706-160	1	OPERATOR'S MANUAL
21	64894-003	1	DECAL AND NAMEPLATE INSTALLATION
20	300113-10	1	RECEPTACLE PANEL ASSEMBLY
19	300101-5	1	MAIN LINE BREAKER PANEL ASSEMBLY
18	16249-000	4	5/16-18 HEX FLANGENUT
17	526-000	4	5/16 FLAT WASHER
16	465-000	4	5/16-18 X 7/8 HEX HEAD BOLT
15	S-7606	1	PTO SHAFT GUARD
14	484-000	4	# 10 SPLIT LOCKWASHER
13	6372-000	4	NUT HEX #10-32 ZINC
12	52464-002	4	#10-32 X 1-1/2 ROUND HEAD SCREW
11	300105	1	LOWER SHAFT GUARD
10	91658-015	4	3/8-16 X 4 HEX HEAD BOLT
9	62825-004	8	SPACER
8	300104	1	PTO SHAFT GUARD SUPPORT PLATE
7	300096	1	SHAFT WASHER
6	300106-1	1	BELLEVILLE WASHER, 5/8"
5	350096-35	1	M16-2.00 X 60MM HEX HEAD BOLT
4	97436-010	12	M10 LOCKWASHER
3	94282-035	12	M10 X 1.50 x 35 MM HEX HEAD BOLT
2	91099-004	1	GEARCASE & ADAPTER ASSY
1	351811-2	1	GENERATOR

ISSUE	E.C.O. NO.	DESCRIPTION	DATE	BY	APPD
A	C3847	ORIGINAL	7/8/2016	ZJF	ZJF

REVISION RECORD

UNLESS OTHERWISE SPECIFIED
FRACTIONS ± —
1. PLACE DEC. ± .1
2. PLACE DEC. ± .015
3. PLACE DEC. ± .005
ANGULAR ± 1.5°

MACHINED SURFACE TEXTURE

ALL DIMENSIONS GIVEN IN INCHES
WORK TO DIMENSIONS
– DO NOT SCALE –

DRAWN BY	DATE	CHKD BY	DATE	APPD BY	DATE	SCALE
ZJF	7/8/2016			ZJF	7/8/2016	1=10

MATERIAL:

FINISH
ASSY
MODEL W105PTOS-4/F

TITLE COMPLETE UNIT ASSEMBLY

THIS DRAWING CONTAINS PROPRIETARY INFORMATION BELONGING TO WINPOWER, UNAUTHORIZED USE IS PROHIBITED.

WINCO® INCORPORATED

64868-010