SERVICE PARTS LIST

ENGINE IDENTIFICATION

To assure correct selection of service replacement parts, record all information imprinted on the Engine Name Plate (Fig. 1) and/or Distributor Modification Name Plate (Fig. 2) affixed to the engine undergoing service repairs. Utilizing the model number, refer to your Bill of Materials (B.O.M.) Microfiche or Distributor Bill of Materials (D.B.O.M.) Microfiche to identify the base engine and all production accessories added to the base engine.

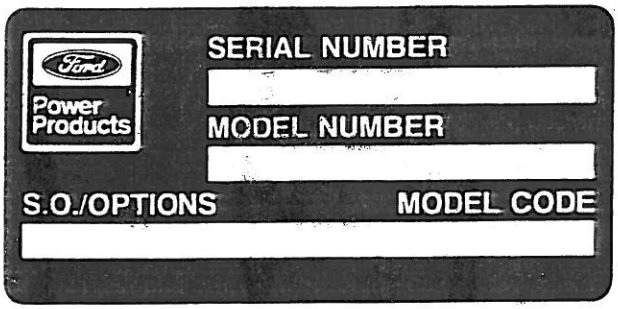

FIG. 1 ENGINE NAME PLATE

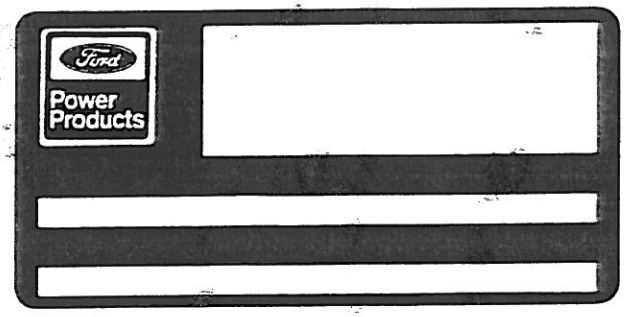

FIG. 2 DISTRIBUTOR MODIFICATION NAME PLATE

SPECIAL NOTE

Since its introduction in 1984, many product improvements have been incorporated into the VSG 411/413 engine series. The most significant improvement is the evolution of the ignition system as illustrated in the following table:

Model	Year of Manufacture	Ignition Type
VSG 411	84/86	Breaker Point
VSG 411-413	86/89	Solid State
VSG-411-413	89/	Distributorless
VSG-411-413	84/89	Breaker Point or Solid State

In order to obtain the correct service replacement parts for your engine, it is essential that the ignition type be identified.

REFER TO THE IGNITION SYSTEM SECTION OF YOUR MAINTENANCE AND OPERATOR'S MANUAL TO IDENTIFY THE TYPE OF IGNITION SYSTEM EQUIPPED ON YOUR ENGINE.

INDEX

AIR CLEANER - VARIABLE VENTURI CARBURETOR 38
AIR CLEANER - DOWNDRAFT CARBURETOR 40
ALTERNATOR 42
BLOCK - CYLINDER 4
CAMSHAFT AND BEARINGS 10
CARBURETOR - VARIABLE VENTURI 32
CARBURETOR - DOWNDRAFT 34
CARBURETOR - SIDEDRAFT 36
CHAIN - TIMING 8
CHOKE AND THROTTLE CABLE 58
CLUTCH ASSEMBLY 18
CONNECTING RODS AND BEARINGS 12
COVER - FRONT TIMING 8
COVER - ROCKER ARM 6
CRANKSHAFT AND BEARINGS 12
EXHAUST SYSTEM 30
FAN BLADE ASSEMBLY 24
FILTER - FUEL 28
FILTER - OIL 22
FLYWHEEL AND RING GEAR 18
GASKET KITS 2
GAUGES, INSTRUMENTS AND PANEL 56
GOVERNOR 52
HEAD - CYLINDER 6
HOSES - COOLING SYSTEM 54
HOUSING - FLYWHEEL 20
IGNITION SYSTEM - BREAKER POINT 46
IGNITION SYSTEM - SOLID STATE 48
IGNITION SYSTEM - DISTRIBUTORLESS 50
MANIFOLDS - INTAKE AND EXHAUST 30
PAN - OIL 22
PISTONS AND RINGS 12
POWER TAKE-OFF ASSEMBLY 20
PUMP - FUEL 28
PUMP - OIL 22
PUMP - WATER 24
RADIATOR 54
RETAINER AND SEAL - REAR ENGINE OIL 12
SENSOR - WATER TEMPERATURE 30
STARTER MOTOR 44
SUPPORT - FRONT ENGINE AND RADIATOR 54
SUPPORT - REAR ENGINE 60
SWITCH - SPEED LIMITING 52
THERMOSTAT 24
TRANSDUCER - IGNITION 4
VALVES AND RELATED PARTS 6
VALVE CONTROL 10
WIRING HARNESS 56
WIRING HARNESS - IGNITION 50

May, 1992
194-265

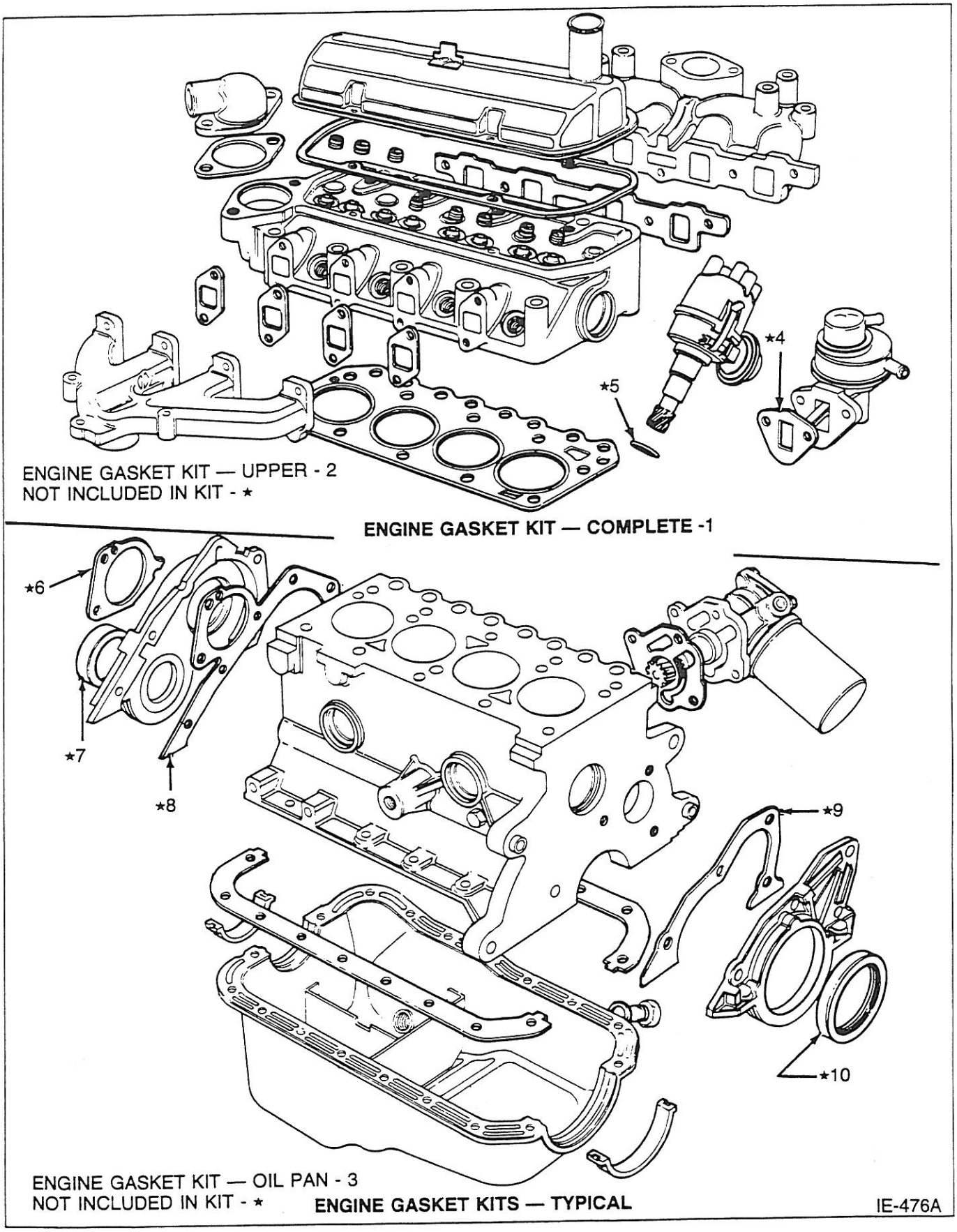

ENGINE GASKET KIT — UPPER - 2
NOT INCLUDED IN KIT - ★

ENGINE GASKET KIT — COMPLETE -1

ENGINE GASKET KIT — OIL PAN - 3
NOT INCLUDED IN KIT - ★

ENGINE GASKET KITS — TYPICAL

IE-476A

VSG 411-413
67-79 CID
GASOLINE ENGINE AND POWER UNIT

REF NO.	YEAR	PART NUMBER	DESCRIPTION	QUANTITY 67	QUANTITY 79
			ENGINE GASKET KITS AND GASKETS		
			ENGINE GASKET KIT - COMPLETE		
1	84/89	A83SX-6008-CA	■Kit	1	
	86/89	A85OX-6008-BA	●Kit		1
	89/	88BX-6008-BA	★Kit		1
	89/92	88BX-6008-AA	★Kit	1	
			ENGINE GASKET KIT - UPPER		
2	84/89	A83SX-6014-CA	■Kit	1	
	86/89	A85OX-6014-KNA	●Kit		1
	89/	88BX-6014-AA	★Kit	1	
	89/	88BX-6014-BA	★Kit		1
			ENGINE GASKET KIT - LOWER		
3	84/92	A76SX-6013-AA	Kit - Oil Pan Gasket	1	
	92/	A85OX-6013-AA	★Kit - Oil Pan Gasket		1
	86/	A85OX-6013-AA	Kit - Oil Pan Gasket		1
			GASKETS AND SEALS - NOT INCLUDED IN UPPER OR LOWER GASKET KITS		
4	84/	83BM-9417-A1A	Gasket - Fuel Pump	1	1
5	84/86	D1RY-12143-A	*Seal - Distributor to Cylinder Block	1	1
6	84/	D8RZ-8507-A	Gasket - Water Pump	1	1
7	84/	83BM-6700-A4A	Seal - Front Cover	1	1
8	84/	D8RZ-6020-A	Gasket - Front Cover	1	1
9	84/92	89BM-6344-AA	Gasket - Rear Retainer	1	
	92/	89BM-6344-BA	★Gasket - Rear Retainer	1	
9	86/	89BM-6344-BA	Gasket - Rear Retainer		1
10	84/	D7RZ-6701-A	Seal - Crankshaft Rear	1	1

*Used on engines having a breaker point ignition system.

●Used on engines having a solid state ignition system.

★Used on engines having a distributorless ignition system.

■Used on engines having a breaker point or a solid state distributor ignition.

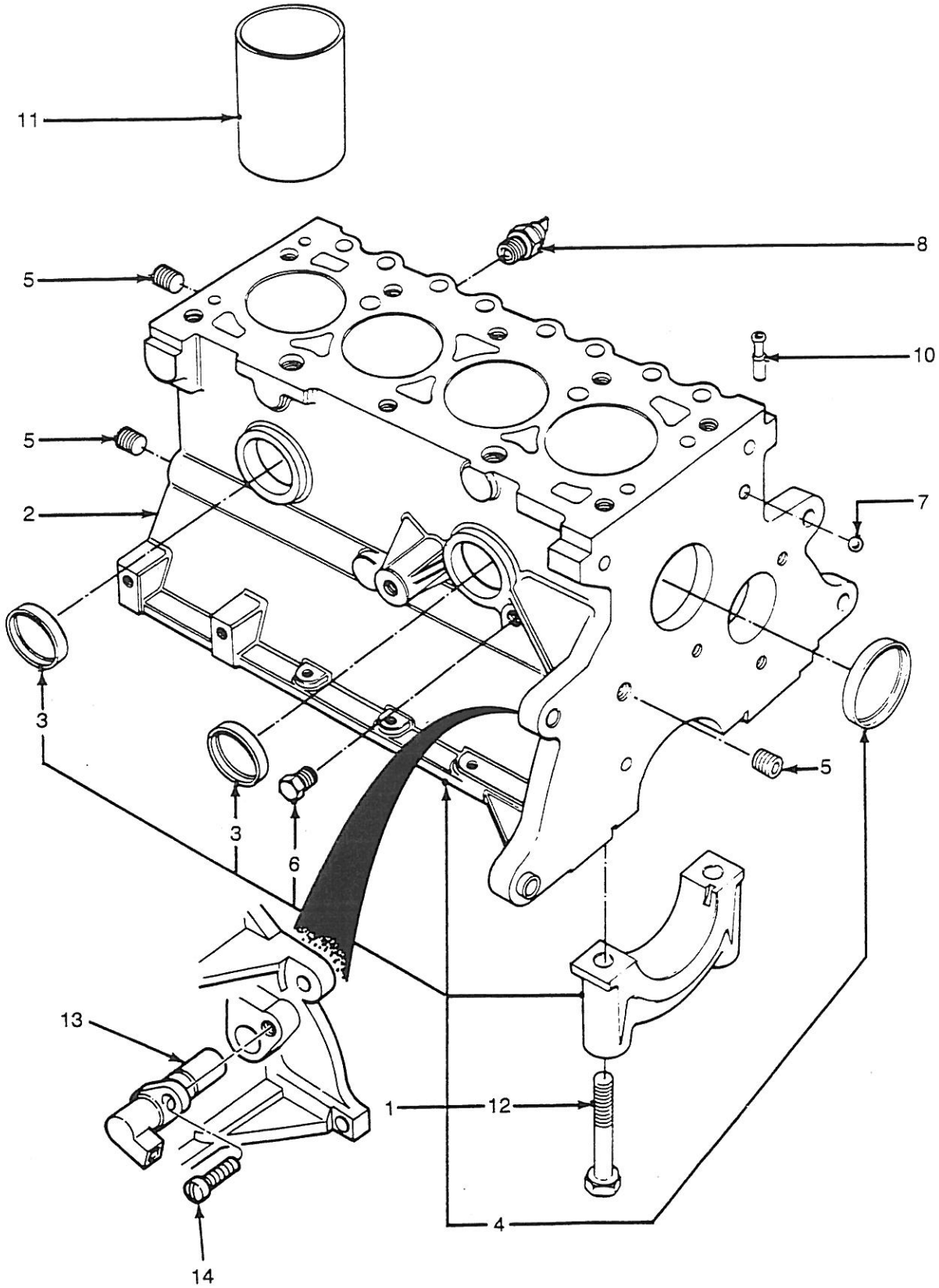

CYLINDER BLOCK AND RELATED PARTS — TYPICAL

IE-477A

VSG 411-413
67-79 CID
GASOLINE ENGINE AND POWER UNIT

Ford Power Products

REF NO.	YEAR	PART NUMBER	DESCRIPTION	QUANTITY 67	QUANTITY 79
			CYLINDER BLOCK AND RELATED PARTS		
			BLOCK ASSEMBLY		
1	84/89	82BM-6010-AA	■Block - Cylinder	1	
	86/89	86BM-6010-BA	●Block - Cylinder		1
	89/92	89BM-6010-EA	★Block - Cylinder	1	
	89/	89BM-6010-FA	★Block - Cylinder		1
	92/	93BM-6010-AA	★Block - Cylinder	1	
			CYLINDER ASSEMBLY		
2	84/89	84BM-6011-FA	■Block - Cylinder - With Crank, Pistons, Rings, Etc.	1	
	86/89	86BM-6011-AA	●Block - Cylinder - With Crank, Pistons, Rings, Etc.		1
	89/92	89BM-6011-BA	★Block - Cylinder - With Crank, Pistons, Rings, Etc.	1	
	89/	89BM-6011-DA	★Block - Cylinder - With Crank, Pistons, Rings, Etc.		1
	92/	93BM-6011-AA	★Block - Cylinder - With Crank, Pistons, Rings, Etc.	1	
			PLUGS - CYLINDER BLOCK		
3	84/	DORY-6026-A	Plugs - Expansion - 1.639 Dia.	2	2
4	84/	D8RZ-6026-A	Plug - 51 mm (2.01)	1	1
5	84/	F1ZZ-6026-A	Plug - 1/4 NPT	3	3
6	84/	353055-S7	Plug - 1/4 NPT	1	1
7	84/	E890100-S	Plug - Ball - Oil Gallery - 11mm (.43)	1	1
8	84/	E7RZ-9278-A	Switch - Oil Pressure	1	1
9	84/	D8RZ-9L271-A	Cover - Oil Pressure Switch (Not Illustrated)	1	1
10	84/	D8RZ-6767-A	Adapter	1	1
11	84/89	77BM-6055-AA	■Liner - Cylinder	AR	
	86/89	86BM-6055-AA	●Liner - Cylinder		AR
	89/	89BM-6055-AA	★Liner - Cylinder	AR	
	89/	89BM-6055-BA	★Liner - Cylinder		AR
12	84/92	D1FZ-6345-A	Bolt - Main Bearing Cap	6	
	92/	D1FZ-6345-A	★Bolt - Main Bearing Cap	10	
	86/	D1FZ-6345-A	Bolt - Main Bearing Cap		10
			TRANSDUCER - IGNITION CONTROL		
13	89/	89BF-6C315-AB	★Transducer - Ignition Control	1	1
14	89/	E802666-S72	★Screw - M6 x 14	1	1

●Used on engines having a solid state ignition system.

★Used on engines having a distributorless ignition system.

■Used on engines having a breaker point or a solid state distributor ignition.

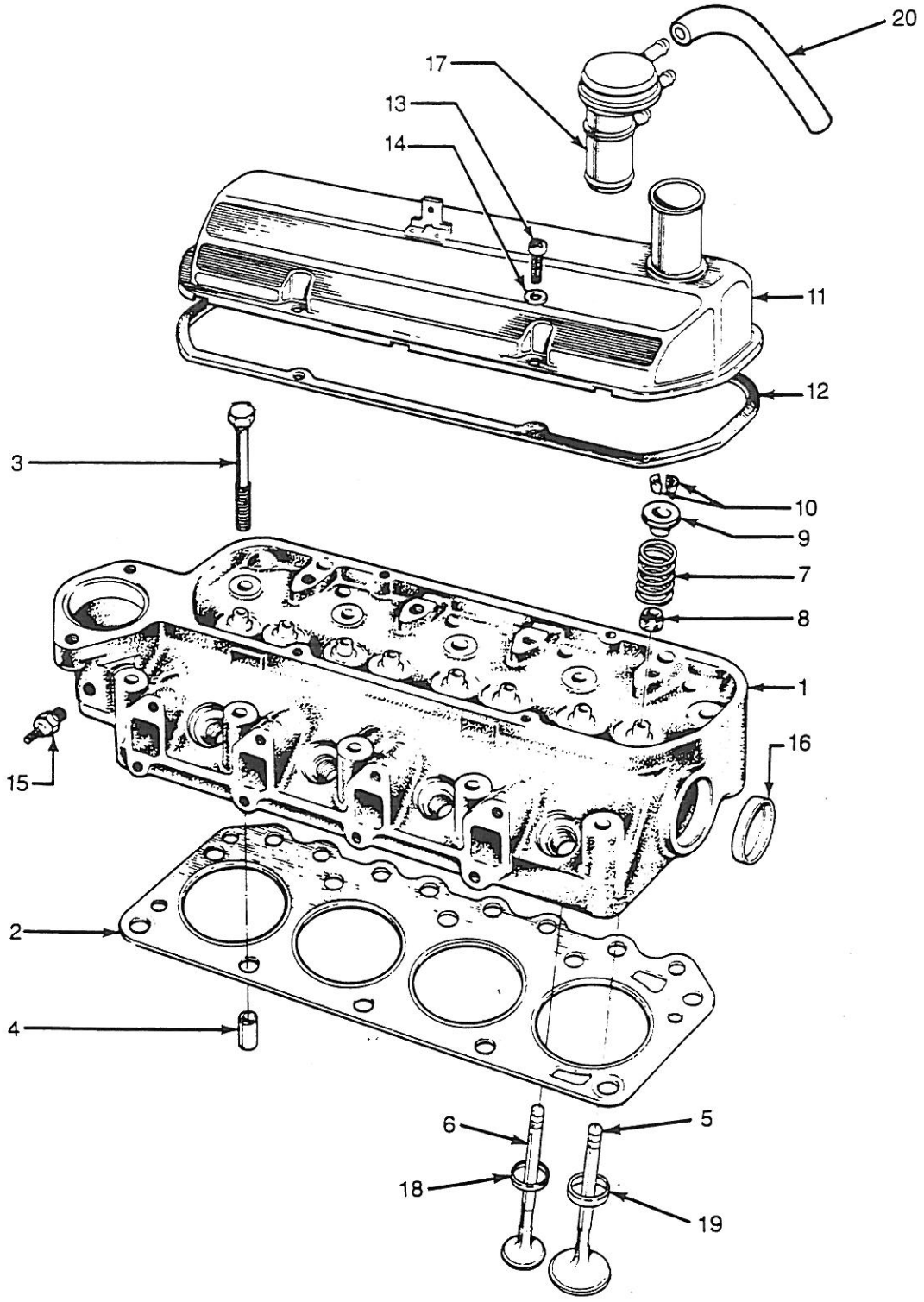

CYLINDER HEAD, VALVES AND RELATED PARTS — TYPICAL

IE-478B

VSG 411-413
67-79 CID
GASOLINE ENGINE AND POWER UNIT

Ford Power Products

REF NO.	YEAR	PART NUMBER	DESCRIPTION	QUANTITY 67	QUANTITY 79
			CYLINDER HEAD, VALVES AND RELATED PARTS		
1	84/86	84BM-6049-DB	*Head Assembly - Cylinder	1	
	86/89	86BM-6049-BB	•Head Assembly - Cylinder	1	
	86/89	86BM-6049-CC	•Head Assembly - Cylinder		1
	89/	89BM-6049-DD	★Head Assembly - Cylinder		1
	89/	89BM-6049-HB	★Head Assembly - Cylinder	1	
2	84/89	86BM-6051-B1A	▪Gasket - Cylinder Head	1	1
	89/	89BM-6051-B2C	★Gasket - Cylinder Head	1	
	89/	89BM-6051-C2B	★Gasket - Cylinder Head		1
3	84/89	77BM-6065-AA	▪Bolt - Cylinder Head	10	10
	89/	89BM-6065-DA	★Bolt - Cylinder Head	10	10
4	84/	E840126-S	Dowel - Cylinder Head to Block	2	2
5	84/89	80BM-6507-AC	▪Valve - Intake - Std.	4	
	84/89	80BM-6507-CC	▪Valve - Intake - .38 mm O/S	A/R	
	86/89	80BM-6507-DC	•Valve - Intake - Std.		4
	86/89	80BM-6507-FC	•Valve - Intake - .38 mm O/S		A/R
	89/	89BM-6507-AA	★Valve - Intake - Std.	4	
	89/	89BM-6507-AC	★Valve - Intake - .40 mm O/S	A/R	
	89/	89BM-6507-BA	★Valve - Intake - Std.		4
	89/	89BM-6507-BC	★Valve - Intake - .40 mm O/S		A/R
6	84/89	77BM-6505-DB	▪Valve - Exhaust - Std.	4	4
	84/89	77BM-6505-FB	▪Valve - Exhaust - .38 mm O/S	A/R	A/R
	89/	89BM-6505-CA	★Valve - Exhaust - Std.	4	4
	89/	89BM-6505-EA	★Valve - Exhaust - .40 mm O/S	A/R	A/R
7	84/89	84BM-6513-AA	▪Spring - Valve	8	
	86/89	86BM-6513-AA	•Spring - Valve		8
	89/	89BM-6513-AA	★Spring - Valve	8	8
8	84/89	77BM-6571-AB	▪Seal - Valve Stem - Exhaust	4	
	84/89	D1FZ-6571-B	▪Seal - Valve Stem	4	8
	89/	88WM-6571-BB	★Seal - Valve Stem - Intake & Exhaust	8	8
9	84/89	D1FZ-6514-B	▪Retainer	8	8
	89/	89BM-6A536-AA	★Retainer	8	8
10	84/89	D1FZ-6518-B	▪Lock - Valve Spring	16	16
	89/	88WM-6518-AA	★Lock - Valve Spring	16	16
11	84/89	89BM-6582-AA	▪Cover - Rocker Arm	1	1
	89/	91BM-6582-GA	★Cover - Rocker Arm	1	1
12	84/	77BM-6584-CA	Gasket - Rocker Arm Cover	1	1
13	84/89	E603166-S72	▪Screw - Rocker Cover to Head	4	4
	89/	E800516-S72	★Screw - Rocker Cover to Head	4	4
14	84/	E630024-S201	Washer - Flat - 6mm	4	4
15	84/89	D0TZ-10884-A	▪Sender - Temperature - 230 Degrees	1	1
	89/	89FB-10884-AA	★Sender - Temperature - 250 Degrees	1	1
	89/	D8RZ-10884-A	★Sender - Temperature - 275 Degrees	1	1
16	84/	DORY-6026-A	Plugs - Expansion - 1.639 Dia.	1	1
17	84/	84BF-6K614-CA	Cap - Oil Fill	1	1
18	86/89	86BM-6057-CA	•Insert - Exhaust Valve Seat	4	4
	89/	89BM-6057-A2E	★Insert - Exhaust Valve Seat	4	4
19	89/	89BM-6056-A1F	★Insert - Intake Valve Seat	4	
	89/	89BM-6056-A1G	★Insert - Intake Valve Seat		4
20	89/	E9JL-6K609-AA	★Hose - PCV	1	1

*Used on engines having a breaker point ignition system.

•Used on engines having a solid state ignition system.

★Used on engines having a distributorless ignition system.

▪Used on engines having a breaker point or a solid state distributor ignition.

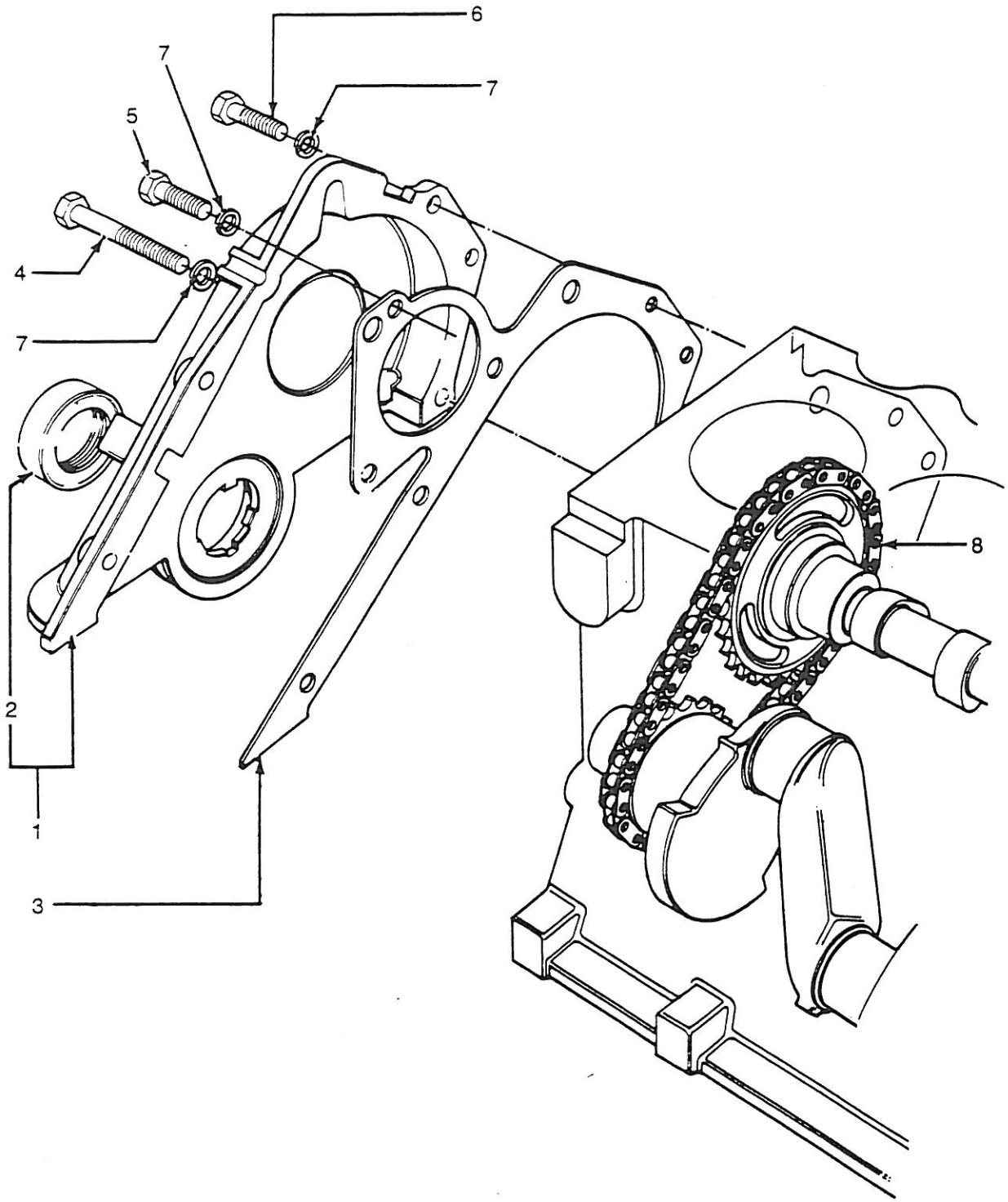

FRONT COVER ASSEMBLY AND RELATED PARTS — TYPICAL IE-479

Ford Power Products

REF NO.	YEAR	PART NUMBER	DESCRIPTION	QUANTITY 67	QUANTITY 79
			FRONT COVER ASSEMBLY AND RELATED PARTS		
1	84/89	77BM-6059-AE	▪Cover - Cylinder Front (Does Not Include Seal)	1	1
	89/	89BM-6019-AA	★Cover and Seal Assembly - Cylinder Front	1	1
2	84/	83BM-6700-A4A	Seal - Front Cover	1	1
3	84/89	D8RZ-6020-A	▪Gasket - Front Cover	1	1
3	89/	89BM-6020-AA	★Gasket - Front Cover	1	1
4	84/89	E600115-S72	▪Bolt - M6 x 50 - Front Cover to Block	1	1
	89/	E800518-S72	★Bolt - M6 x 45 - Front Cover to Block	1	1
5	84/	E600113-S72	Bolt - M6 x 40 - Front Cover and W/P to Block	3	3
6	84/89	E602167-S71	▪Bolt - M6 x 20	4	4
	89/	E800512-S72	★Bolt - M6 x 18 - Front Cover to Block	4	4
7	84/	E832108S71M	Washer - Lock - m6 - Front Cover and W/P to Block	8	8
8	84/	DORY-6268-A	Chain Assembly - Timing	1	1

★Used on engines having a distributorless ignition system.

▪Used on engines having a breaker point or a solid state distributor ignition.

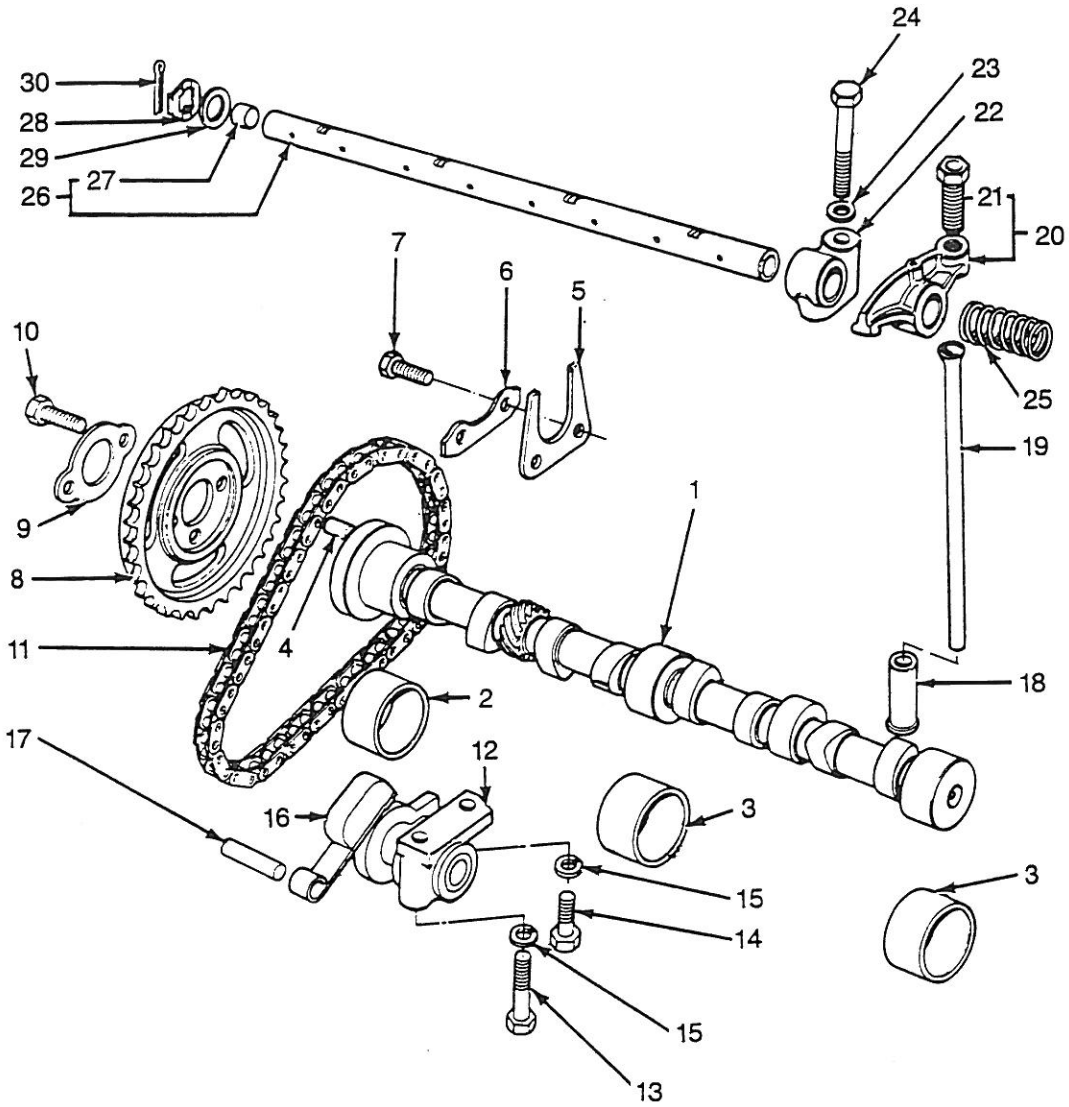

CAMSHAFT AND VALVE CONTROL — TYPICAL

IE-480

VSG 411-413
67-79 CID
GASOLINE ENGINE AND POWER UNIT

Ford Power Products

REF NO.	YEAR	PART NUMBER	DESCRIPTION	QUANTITY 67	QUANTITY 79
			CAMSHAFT AND VALVE CONTROL		
1	84/89	86BM-6250-BA	▪Camshaft	1	1
	89/	89BM-6251-AA	★Camshaft	1	
	89/	89BM-6251-BA	★Camshaft		1
2	84/	DORY-6261-A	Bearing - Front - Std. ID - Std. OD	1	1
	84/	DORY-6261-B	Bearing - Front - Std. ID ¢ .020 OD	AR	AR
3	84/	DORY-6262-B	Bearing - Center And Rear - Std. ID - .020 OD	AR	AR
	84/	DORY-6262-C	Bearing - Center And Rear - Std. ID - Std. OD	2	2
4	84/	E93A-6253-A	Dowel	1	1
5	84/	DORY-6269-A	Plate - Thrust	1	1
6	84/	DORY-6255-A	Retainer	1	1
7	84/	N602166-S2	Bolt - M6 x 16	2	2
8	84/	77BM-6256-AA	Sprocket - Camshaft	1	1
9	84/	DORY-6258-A	Retainer	1	1
10	84/	E602351-S72	Bolt - M8 x 16	2	2
11	84/	DORY-6268-A	Chain Assembly - Timing	1	1
12	84/	DIFZ-6284-A	Tensioner	1	1
13	84/	E600116-S204	Bolt - M6 x 55 - Tensioner to Block	1	1
14	84/	N602166-S72	Bolt - M6 x 16 - Tensioner to Block	1	1
15	84/	34805-S8	Washer - 1/4 Lock	2	2
16	84/	77BM-6K255-AC	Arm - Tensioner	1	1
17	84/	E43-CP-1	Pin	1	1
18	84/89	D1FZ-6500-A	▪Tappet - Std.	8	8
	84/89	711F-6500-DA	▪Tappet - .004 O/S	AR	AR
	89/	89BM-6500-AA	★Tappet - Std.	8	8
19	84/89	77BM-6565-BA	▪Rod - Valve Push	8	
	86/89	86BM-6565-AC	●Rod - Valve Push		8
	89/	89BM-6565-AA	★Rod - Valve Push	8	8
20	84/89	77BM-6529-AB	▪Arm - Valve Rocker - Right - Includes Screw	4	4
	84/89	77BM-6K528-AB	▪Arm - Valve Rocker - Left - Includes Screw	4	4
	89/	89BM-6529-AB	★Arm - Valve Rocker - Right - Includes Screw	4	4
	89/	89BM-6K528-AB	★Arm - Valve Rocker - Left - Includes Screw	4	4
21	84/	DORY-6549-B	Screw - Valve Rocker Arm	8	8
22	84/	77BM-6531-BB	Support - Rocker Arm Shaft	4	4
23	84/	E630031-S101	Washer - B10 x 20 x 2.5	4	4
24	84/89	E600314-S72	▪Bolt - Rocker Support - M10 x 45	4	4
	89/	E800509-S72	★Bolt - Rocker Support	4	4
25	84/	DORY-6587-A	Spring - Locating	3	3
26	84/	89BM-6A557-AA	Shaft Assembly - Rocker Arm - Includes Plugs	1	1
27	84/	357966-S	Plug - Rocker Shaft End	2	2
28	84/	77BM-6598-AB	Washer - Spring	2	2
29	84/	DORY-6590-A	Washer - Flat Type	2	2
30	84/	72025-S7	Pin - Cotter - 3/32 x 7/8	2	2

●Used on engines having a solid state ignition system.

★Used on engines having a distributorless ignition system.

▪Used on engines having a breaker point or a solid state distributor ignition.

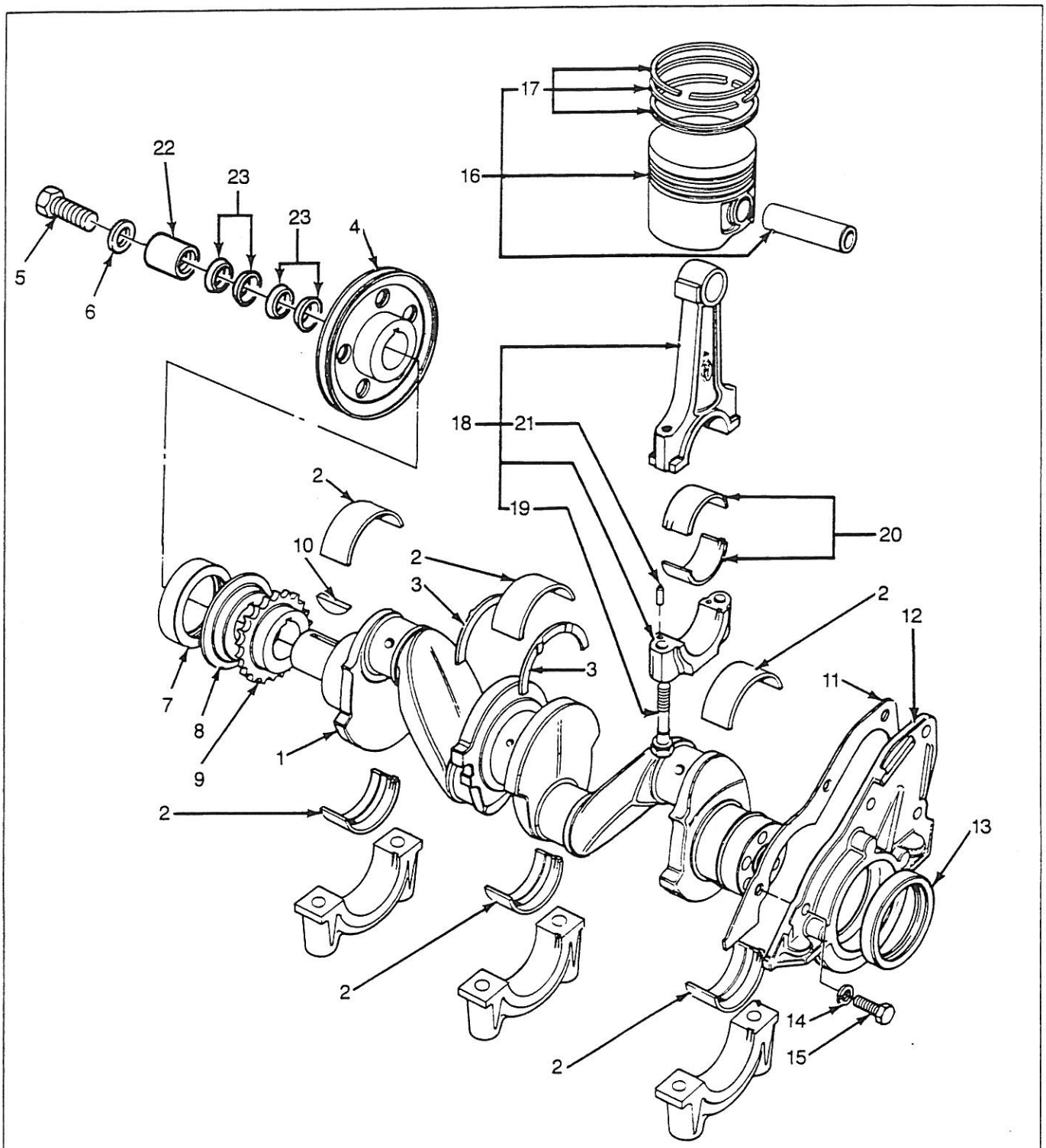

CRANKSHAFT, PISTON AND RELATED PARTS — TYPICAL

IE-481A

VSG 411-413
67-79 CID
GASOLINE ENGINE AND POWER UNIT

Ford Power Products

REF NO.	YEAR	PART NUMBER	DESCRIPTION	QUANTITY 67	QUANTITY 79
			CRANKSHAFT, PISTON AND RELATED PARTS		
1	84/89	77BM-6303-DA	▪Crankshaft Assembly	1	
	86/89	86BM-6303-AA	●Crankshaft Assembly		1
	89/92	89BM-6303-CA	★Crankshaft Assembly	1	
	92/	89BM-6303-DA	★Crankshaft Assembly	1	
	89/	89BM-6303-DA	★Crankshaft Assembly		1
2	84/89	77BM-6333-BAA	▪Main Bearing - Crankshaft - Upper and Lower - Std. OD - Std. ID	6	10
	84/89	77BM-6333-BBA	▪Main Bearing - Crankshaft - Upper and Lower - Std. OD - .010 US ID	AR	AR
	84/89	77BM-6333-BCA	▪Main Bearing - Crankshaft - Upper and Lower - .015 OS OD - Std. ID	AR	AR
	84/89	77BM-6333-BDA	▪Main Bearing - Crankshaft - Upper and Lower - Std. OD - .020 US ID	AR	AR
	84/89	77BM-6333-BEA	▪Main Bearing - Crankshaft - Upper and Lower - Std. OD - .030 US ID	AR	AR
	84/89	77BM-6333-BFA	▪Main Bearing - Crankshaft - Upper and Lower - .015 OS OD - .010 US ID	AR	AR
	84/89	77BM-6333-BGA	▪Main Bearing - Crankshaft - Upper and Lower - .015 OS OD - .020 US ID	AR	AR
	84/89	77BM-6333-BHA	▪Main Bearing - Crankshaft - Upper and Lower - .015 OS OD - .030 US ID	AR	AR
	84/89	77BM-6333-BJA	▪Main Bearing - Crankshaft - Upper and Lower - Std. OD - .005 US ID	AR	AR
	89/92	89BM-6331-AA	★Main Bearing - Crankshaft - Lower - Std. OD - Std. ID	3	
	92/	89BM-6331-AA	★Main Bearing - Crankshaft - Lower - Std. OD - Std. ID	5	
	89/	89BM-6331-AA	★Main Bearing - Crankshaft - Lower - Std. OD - Std. ID		5
	89/	89BM-6331-BA	★Main Bearing - Crankshaft - Lower - Std. OD - .005 US ID	AR	AR
	89/	89BM-6331-CA	★Main Bearing - Crankshaft - Lower - Std. OD - .010 US ID	AR	AR
	89/	89BM-6331-DA	★Main Bearing - Crankshaft - Lower - .015 OS OD - Std. ID	AR	AR
	89/	89BM-6331-EA	★Main Bearing - Crankshaft - Lower - Std. OD - .020 US ID	AR	AR
	89/	89BM-6331-FA	★Main Bearing - Crankshaft - Lower - Std. OD - .030 US ID	AR	AR
	89/	89BM-6331-GA	★Main Bearing - Crankshaft - Lower - .015 OS OD - .010 US ID	AR	AR
	89/	89BM-6331-HA	★Main Bearing - Crankshaft - Lower - .015 OS OD - .020 US ID	AR	AR
	89/92	89BM-6333-AA	★Main Bearing - Crankshaft - Upper - Std. OD - Std. ID	3	
	92/	89BM-6333-AA	★Main Bearing - Crankshaft - Upper - Std. OD - Std. ID	5	
	89/	89BM-6333-AA	★Main Bearing - Crankshaft - Upper - Std. OD - Std. ID		5
	89/	89BM-6333-BA	★Main Bearing - Crankshaft - Upper - Std. OD - .005 US ID	AR	AR
	89/	89BM-6333-CA	★Main Bearing - Crankshaft - Upper - Std. OD - .010 US ID	AR	AR
	89/	89BM-6333-DA	★Main Bearing - Crankshaft - Upper - .015 OS OD - Std. ID	AR	AR
	89/	89BM-6333-EA	★Main Bearing - Crankshaft - Upper - Std. OD - .020 US ID	AR	AR
	89/	89BM-6333-FA	★Main Bearing - Crankshaft - Upper - Std. OD - .030 US ID	AR	AR
	89/	89BM-6333-GA	★Main Bearing - Crankshaft - Upper - .015 OS OD - .010 US ID	AR	AR
	89/	89BM-6333-HA	★Main Bearing - Crankshaft - Upper - .015 OS OD - .020 US ID	AR	AR

●Used on engines having a solid state ignition system.

★Used on engines having a distributorless ignition system.

▪Used on engines having a breaker point or a solid state distributor ignition.

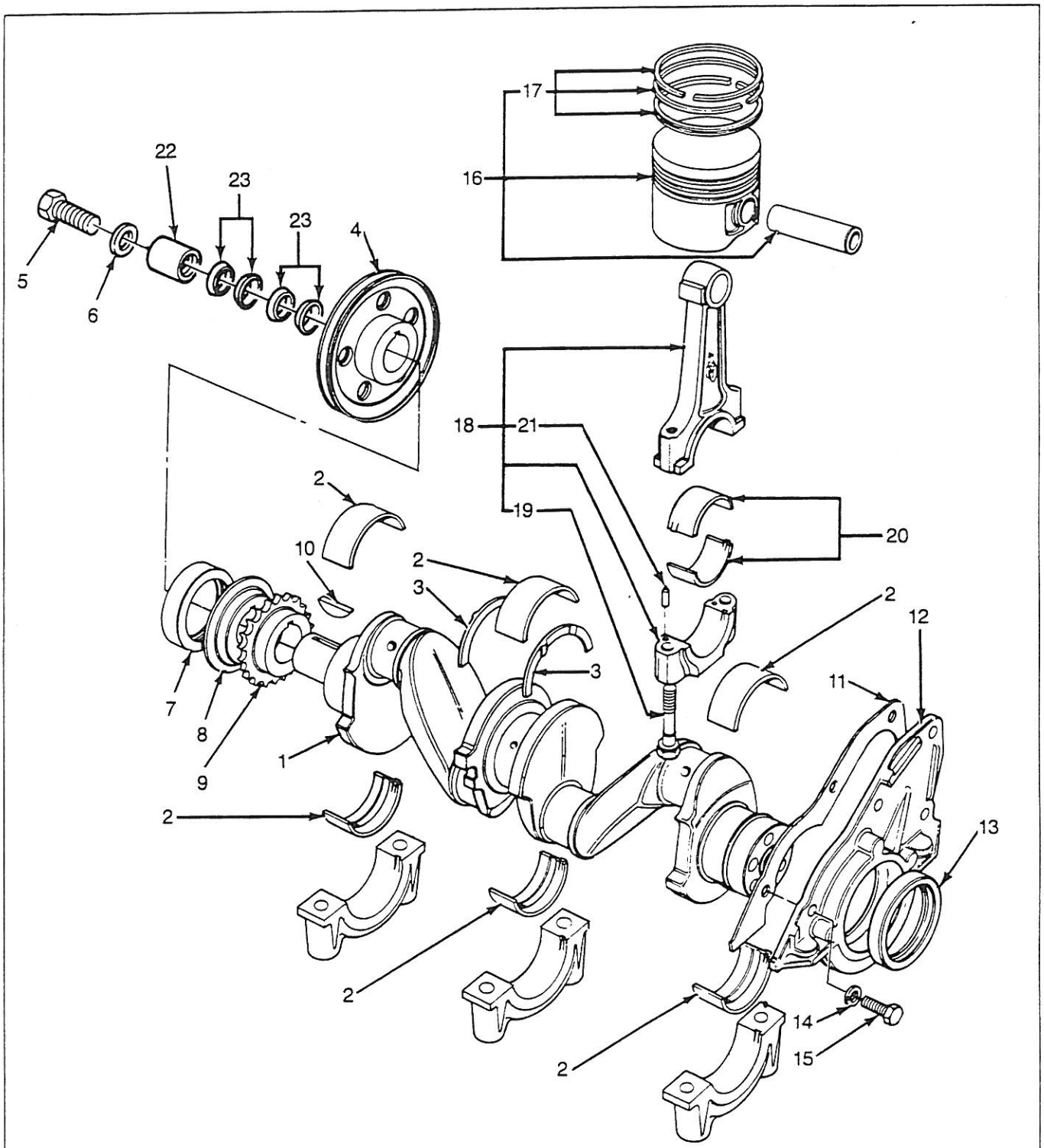

CRANKSHAFT, PISTON AND RELATED PARTS — TYPICAL

IE-481A

Ford Power Products

REF NO.	YEAR	PART NUMBER	DESCRIPTION	QUANTITY 67	QUANTITY 79
			CRANKSHAFT, PISTON AND RELATED PARTS (Cont'd)		
3	84/	89BM-6A341-AA	Washer - Main Bearing Thrust - Std.	2	2
	84/	89BM-6A341-BA	Washer - Main Bearing Thrust - .015 OS	AR	AR
4	84/	89BM-6312-AA	Pulley - Crankshaft - 1 Groove	1	1
	84/	E5JL-6A312-BA	Pulley - Crankshaft - 2 Groove	1	1
	89/	E7JL-6A312-AA	★Pulley - Crankshaft - 2 Groove - Full PTO	1	1
5	89/	89BM-6K340-AA	★Bolt - Pulley to Crankshaft - M12 x 32	1	1
	89/	E7JL-6K340-AA	★Bolt - Pulley to Crankshaft - M12 x 45 - Use With E7JL-AA Pulley	1	1
	84/89	E800334-S76	▪Bolt - Pulley to Crankshaft - M12 x 35	1	1
6	84/	E830135-S76	Washer - Pulley to Crankshaft - B12	1	1
7	84/	83BM-6700-A4A	Seal - Front Cover	1	1
8	84/	D8RZ-6310-A	Slinger - Oil	1	1
9	84/	DORY-6306-A	Sprocket	1	1
10	84/	DORY-6B316-A	Key - Woodruff	1	1
11	84/92	89BM-6344-AA	Gasket - Rear Retainer	1	
	92/	89BM-6344-BA	★Gasket - Rear Retainer	1	
	86/	89BM-6344-BA	Gasket - Rear Retainer		1
12	84/92	77BM-6K318-AC	Retainer Assembly - Rear	1	
	92/	86BM-6K318-AA	★Retainer Assembly - Rear	1	
	86/	86BM-6K318-AA	Retainer Assembly - Rear		1
13	84/92	D7RZ-6701-A	Seal - Crankshaft Rear	1	
	92/	86HM-6701-A1A	★Seal - Crankshaft Rear	1	
	86/	86HM-6701-A1A	Seal - Crankshaft Rear		1
14	84/	E630173-S71M	Washer - M8 Lock	4	4
15	84/	E602187-S72	Bolt - M8 x 20	4	4
16	84/89	84BM-6102-GA	▪Piston, Pin and Ring Assembly - Std.	4	
	84/89	84BM-6102-HA	▪Piston, Pin and Ring Assembly - .020 OS	AR	
	84/89	84BM-6102-JA	▪Piston, Pin and Ring Assembly - .040 OS	AR	
	86/89	86BM-6102-AC	●Piston, Pin and Ring Assembly - Std.		4
	86/89	86BM-6102-BC	●Piston, Pin and Ring Assembly - .020 OS		AR
	86/89	86BM-6102-CC	●Piston, Pin and Ring Assembly - .040 OS		AR
	89/	89BM-6102-AA	★Piston, Pin and Ring Assembly - Std.	4	
	89/	89BM-6102-BA	★Piston, Pin and Ring Assembly - .020 OS	AR	
	89/	89BM-6102-CA	★Piston, Pin and Ring Assembly - .040 OS	AR	
	89/	89BM-6102-DA	★Piston, Pin and Ring Assembly - Std.		4
	89/	89BM-6102-EA	★Piston, Pin and Ring Assembly - .020 OS		AR
	89/	89BM-6102-FA	★Piston, Pin and Ring Assembly - .040 OS		AR
17	84/89	84BM-6148-DA	▪Ring Set - Piston - Std.	4	4
	84/89	84BM-6148-EA	▪Ring Set - Piston - .020 OS	AR	AR
	84/89	84BM-6148-FA	▪Ring Set - Piston - .040 OS	AR	AR
	89/	89BM-6148-AA	★Ring Set - Piston - Std.	4	
	89/	89BM-6148-BA	★Ring Set - Piston - .020 OS	AR	
	89/	89BM-6148-CA	★Ring Set - Piston - .040 OS	AR	
	89/	89BM-6148-DA	★Ring Set - Piston - Std.		4
	89/	89BM-6148-EA	★Ring Set - Piston - .020 OS		AR
	89/	89BM-6148-FA	★Ring Set - Piston - .040 OS		AR
18	84/89	77BM-6200-BB	▪Rod Assembly - Connecting	4	
	86/89	86BM-6200-AA	●Rod Assembly - Connecting		4
	89/	89BM-6200-AD	★Rod Assembly - Connecting	4	4
19	84/89	77BM-6214-AA	▪Bolt - Connecting Rod	8	8
	89/	89BM-6214-DB	★Bolt - Connecting Rod	8	8
20	84/89	81SM-6211-AA	▪Bearing - Connecting Rod - Std.	8	8
	84/89	81SM-6211-BA	▪Bearing - Connecting Rod - .010 US	AR	AR
	84/89	81SM-6211-CA	▪Bearing - Connecting Rod - .020 US	AR	AR
	84/89	81SM-6211-DA	▪Bearing - Connecting Rod - .030 US	AR	AR
	84/89	81SM-6211-EA	▪Bearing - Connecting Rod - .040 US	AR	AR
	89/	89BM-6211-AA	★Bearing - Connecting Rod - Std.	8	8
	89/	89BM-6211-BA	★Bearing - Connecting Rod - .001 US	AR	AR
	89/	89BM-6211-CA	★Bearing - Connecting Rod - .010 US	AR	AR

●Used on engines having a solid state ignition system.

★Used on engines having a distributorless ignition system.

▪Used on engines having a breaker point or a solid state distributor ignition.

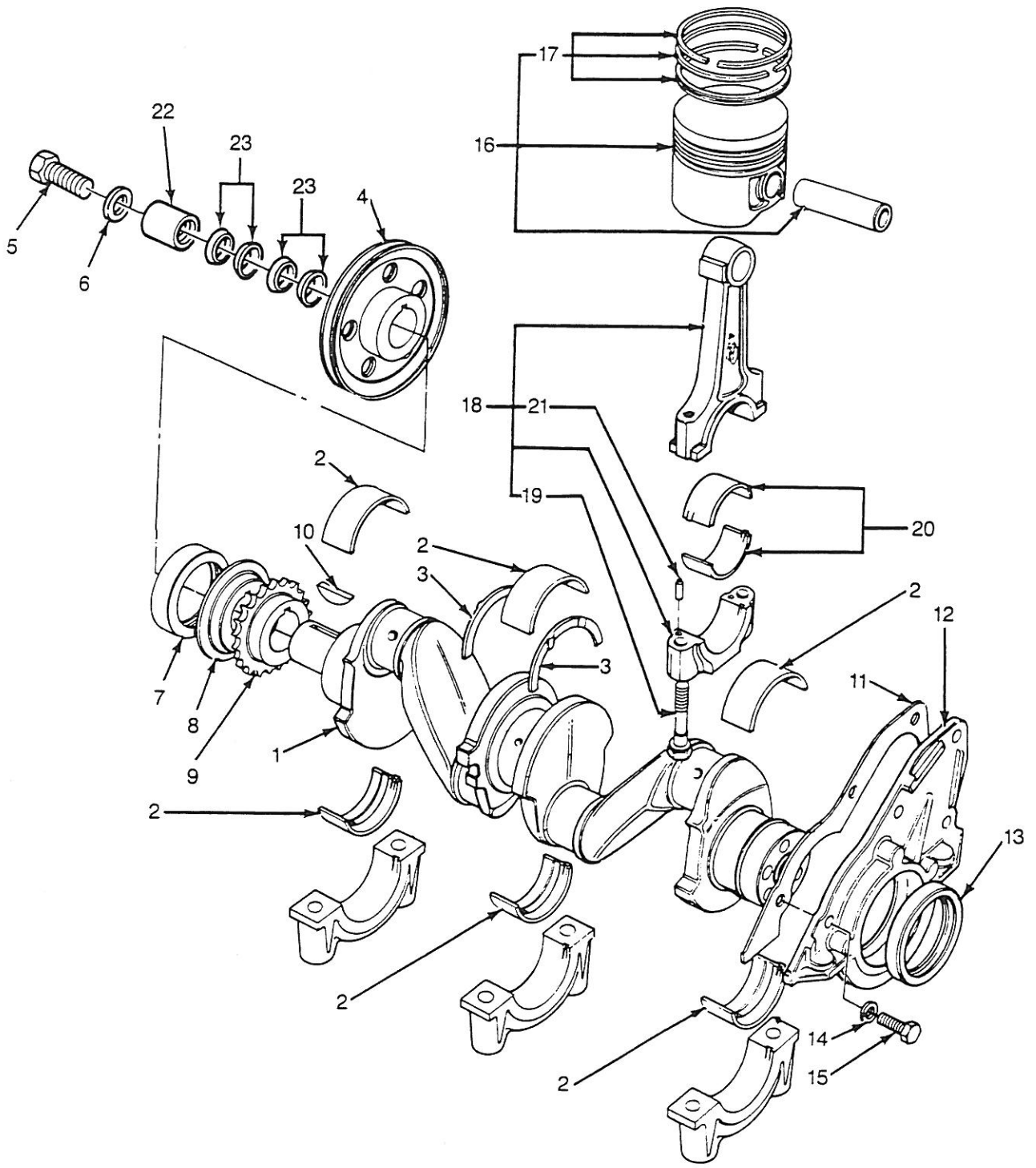

CRANKSHAFT, PISTON AND RELATED PARTS — TYPICAL

IE-481A

Ford Power Products

CRANKSHAFT, PISTON AND RELATED PARTS (Cont'd)

REF NO.	YEAR	PART NUMBER	DESCRIPTION	QUANTITY 67	QUANTITY 79
20	89/	89BM-6211-DA	★Bearing - Connecting Rod - .020 US	AR	AR
	89/	89BM-6211-EA	★Bearing - Connecting Rod - .030 US	AR	AR
21	84/	116336-ES100	Dowel Pin - Connecting Rod	8	8
22	89/	E7JL-6378-AA	★Compression Washer - Use With E7JL-6A312-AA Pulley	1	1
23	89/	E7JL-6N300-AA	★Locking Ring - Use With E7JL-6A312-AA Pulley	2	2

★Used on engines having a distributorless ignition system.

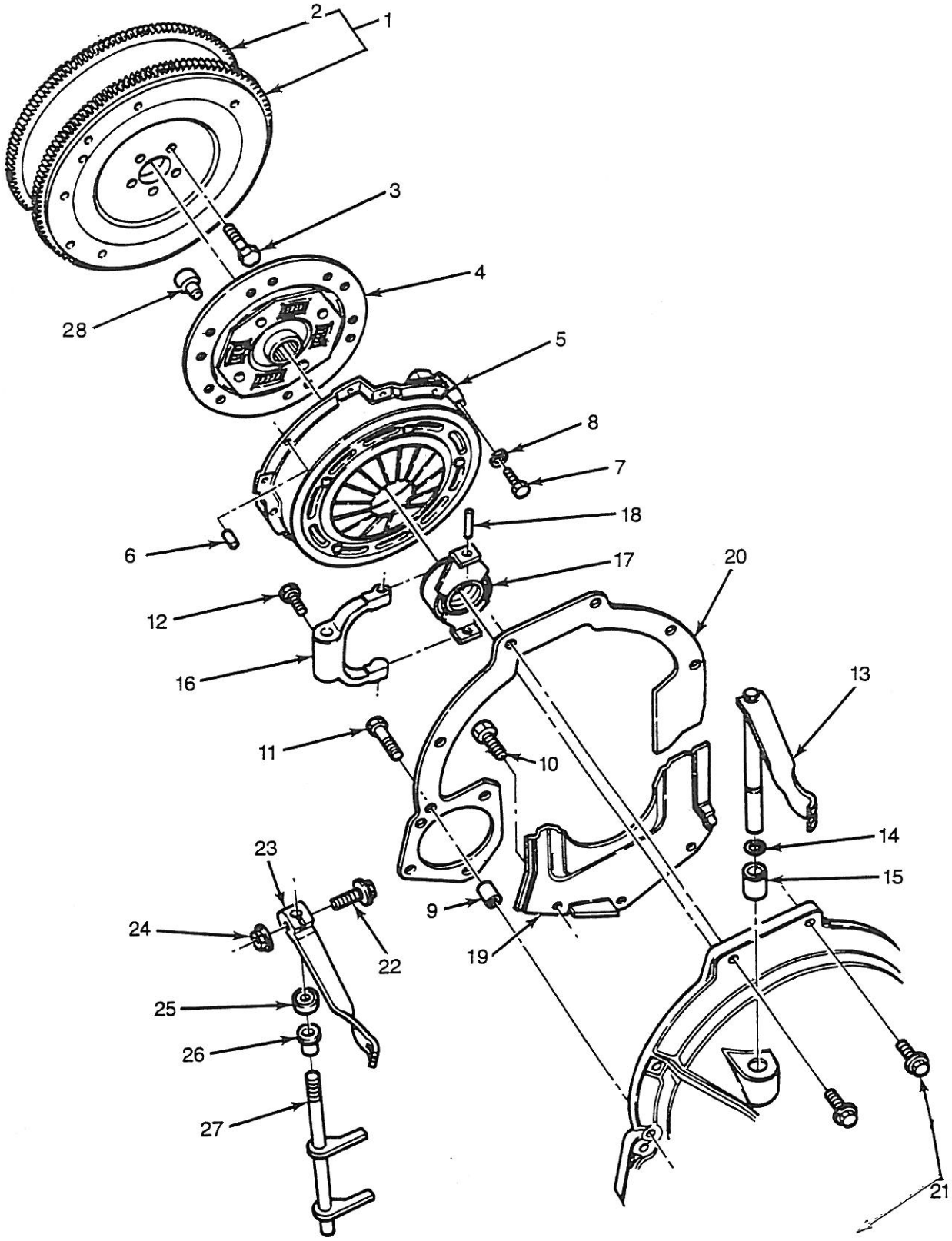

FLYWHEEL, CLUTCH AND RELATED PARTS — TYPICAL

IE-482C

Ford Power Products

REF NO.	YEAR	PART NUMBER	DESCRIPTION	QUANTITY 67	QUANTITY 79
			FLYWHEEL, CLUTCH AND RELATED PARTS		
1	84/86	77BM-6375-CA	*Flywheel and Ring Gear Assembly - 6.5 Clutch or Stub Shaft PTO	1	
	87/92	89BM-6375-AA	Flywheel and Ring Gear Assembly - 7.5 Clutch or Stub Shaft PTO	1	
	92/	89BM-6375-BA	★Flywheel and Ring Gear Assembly - 7.5 Clutch or Stub Shaft PTO	1	
	86/	89BM-6375-BA	Flywheel and Ring Gear Assembly - 7.5 Clutch or Stub Shaft PTO		1
	84/89	E5JL-6375-AA	▪Flywheel And Ring Gear Assembly - 6.5 Over Center Clutch PTO	1	
	86/89	E6JL-6375-AA	●Flywheel And Ring Gear Assembly - 6.5 Over Center Clutch PTO		1
	92/	E8JL-6375-AA	★Flywheel And Ring Gear Assembly - 6.5 Over Center Clutch PTO	1	
	89/92	E8JL-6375-BA	★Flywheel And Ring Gear Assembly - 6.5 Over Center Clutch PTO	1	
	89/	E8JL-6375-AA	★Flywheel And Ring Gear Assembly - 6.5 Over Center Clutch PTO		1
2	84/	D8RZ-6384-A	Ring Gear - Flywheel - 135 Teeth	1	1
3	84/92	D2RY-6379-A	Bolt - M10 x 22.5 - Flywheel to Crankshaft	5	6
	92/	D2RY-6379-A	★Bolt - M10 x 22.5 - Flywheel to Crankshaft	6	
4	84/86	81AB-7550-EA	*Disc - Clutch - 6.5	1	
	86/	81AB-7550-BA	Disc - Clutch - 7.5	1	1
5	84/86	81AB-7563-AA	*Plate and Cover Assembly - Clutch - 6.5	1	
	86/	D8RZ-7563-A	Plate and Cover Assembly - Clutch - 7.5	1	1
6	84/	D1FZ-6397-B	Dowel	3	3
7	86/	E602186-S72	Bolt - M8 x 16	6	6
	84/86	N602166-S2	*Bolt - M6 x 16	6	
8	86/	E630173-S71M	Washer - M8 Lock	6	6
9	84/	70HM-6397-AA	Dowel	2	2
10	84/	E800003-S72	Bolt - M10 x 45 UBS	AR	AR
11	84/	E800178-S100	Bolt - M10 x 50	1	1
12	84/	E800661-S200	Bolt - M8 x 20	1	1
13	84/88	D8RZ-7515-B	▪Lever and Shaft Assembly - Clutch Release (Not Replaced)	1	1
14	84/88	E854058-S	▪O-Ring (Not Replaced)	1	1
15	84/88	D8RZ-7N620-A	▪Bushing - Clutch Release Lever	1	1
16	84/88	77FB-7N515-AA	▪Fork - Clutch Release (Not Replaced)	1	1
17	84/	86AB-7548-AA	Bearing and Hub Assembly - Clutch Release	1	1
18	84/	E646511-S71M	Pin - M3 x 14 Spring	1	1
19	84/92	77FB-7611-BD	Plate - Rear Engine Lower	1	
	92/	86AB-7611-AC	★Plate - Rear Engine Lower	1	
	86/	86AB-7611-AC	Plate - Rear Engine Lower		1
20	84/	771M-6A373-AA	Plate - Rear Engine Upper	1	1
21	90/	304741-S36	★Bolt - 3/8-18 x 1-3/8	2	2
	84/90	N605547-S36	Bolt - M10 x 35	2	2
22	88/	E800308-S72	Bolt - M8 x 40	1	1
23	88/	89FB-7541-AC	Lever - Clutch Realease	1	1
24	88/	N620480-S2	Nut - M6	1	1
25	88/	89FB-7K584-AC	Cap - Protective	1	1
26	88/	91AB-7N620-AC	Bushing - Clutch Release Fork	1	1
27	88/90	89FB-7503-AC	Fork and Shaft Assembly	1	1
	90/	89FB-7503-AD	★Fork and Shaft Assembly	1	1
28	89/	E840161-S	★Dowel - Flywheel to Crankshaft	1	1

*Used on engines having a breaker point ignition system.

●Used on engines having a solid state ignition system.

★Used on engines having a distributorless ignition system.

▪Used on engines having a breaker point or a solid state distributor ignition.

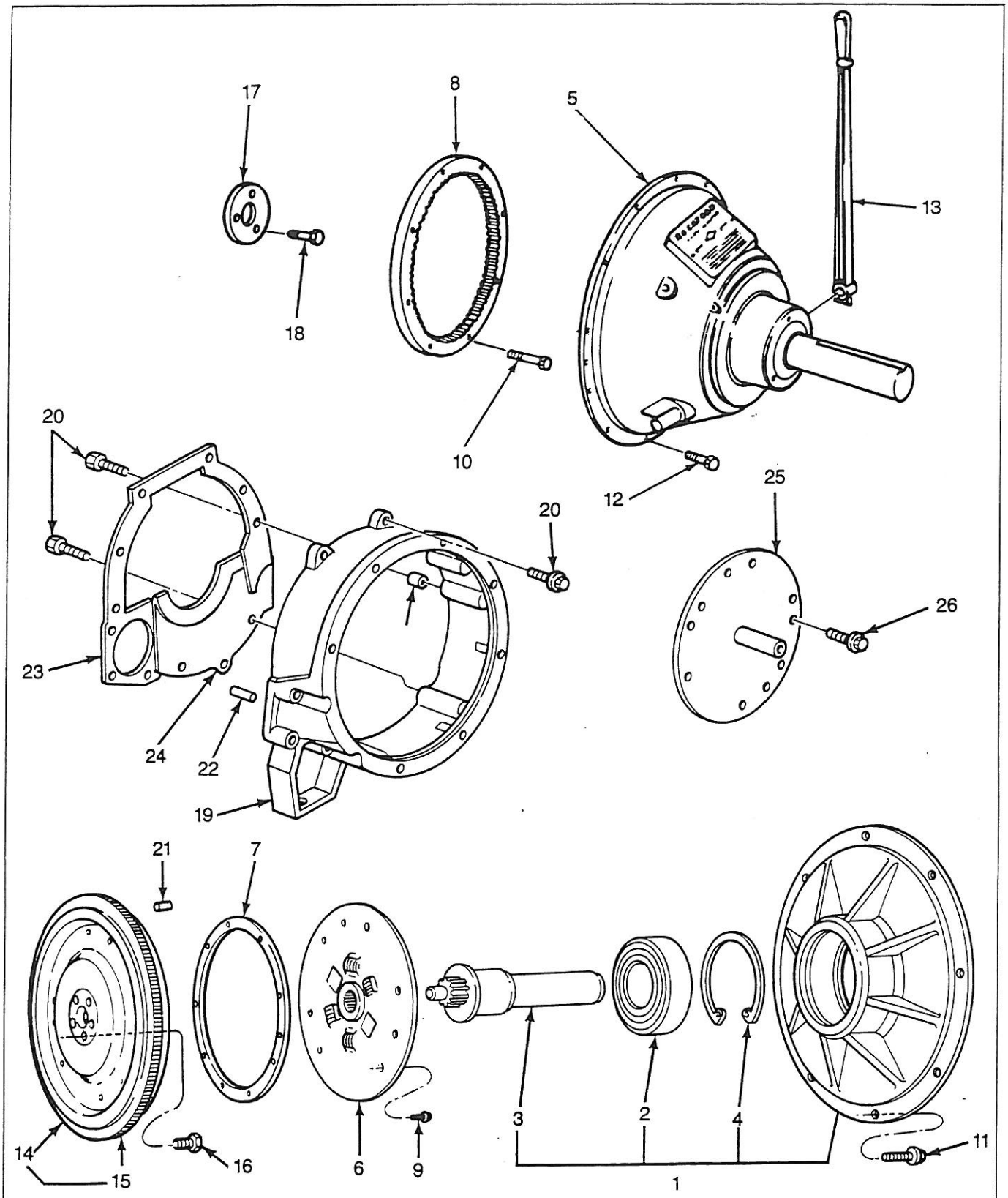

PTO, FLYWHEEL, FLYWHEEL HOUSING AND RELATED PARTS — TYPICAL

IE-483C

Ford Power Products

REF NO.	YEAR	PART NUMBER	DESCRIPTION	QUANTITY 67	QUANTITY 79
			PTO, FLYWHEEL, FLYWHEEL HOUSING AND RELATED PARTS		
1	84/	E5JL-7275-AA	PTO Assembly - Stub Shaft	1	1
			CONSISTS OF:		
2	84/	E5JL-7600-AA	Bearing Assembly - PTO	1	1
3	84/	E5JL-7017-BA	Shaft - PTO Drive	1	1
4	84/	N660272-S	Ring - Internal Retaining	2	2
5	84/	E5JL-7275-BA	PTO Assembly - 6.5 Over Center Clutch	1	1
6	84/	E6JL-7278-AA	Drive Plate - Stub Shaft PTO	1	1
7	84/89	E5JL-6376-BA	▪Spacer - Drive Plate - Stub Shaft PTO	1	
	89/	E5JL-6376-AA	★Spacer - Drive Plate - Stub Shaft PTO	1	
	86/	E5JL-6376-AA	Spacer - Drive Plate - Stub Shaft PTO		1
8	84/	E5JL-7278-CA	Drive Ring - 6.5 Over Center PTO	1	1
9	84/86	N605773-S100	*Bolt - M6 x 20	6	
	87/	N605787-S52	Bolt - M8 x 25	6	
	86/	N605787-S52	Bolt - M8 x 25		6
10	84/	42960-S36	Bolt - 5/16-18 x 1.50 Hex Hd.	6	6
11	84/	56540-S2	Bolt - 3/8-16 x 1.00	8	8
12	84/	56141-S2	Bolt - 3/8-16 x 1.25	8	8
13	84/	D7JL-7K741-A	Handle - 10.0 O.C. Clutch PTO	1	1
14	84/86	77BM-6375-CA	*Flywheel and Ring Gear Assembly - 6.5 Clutch or Stub Shaft PTO	1	
	86/	89BM-6375-AA	Flywheel and Ring Gear Assembly - 7.5 Clutch or Stub Shaft PTO	1	
	86/	89BM-6375-BA	Flywheel and Ring Gear Assembly - 7.5 Clutch or Stub Shaft PTO		1
	84/89	E5JL-6375-AA	▪Flywheel And Ring Gear Assembly - 6.5 Over Center Clutch PTO	1	
	86/89	E6JL-6375-AA	●Flywheel And Ring Gear Assembly - 6.5 Over Center Clutch PTO		1
	89/	E8JL-6375-AA	★Flywheel And Ring Gear Assembly - 6.5 Over Center Clutch PTO		1
	89/	E8JL-6375-BA	★Flywheel And Ring Gear Assembly - 6.5 Over Center Clutch PTO	1	
15	84/	D8RZ-6384-A	Ring Gear - Flywheel - 135 Teeth	1	1
16	84/	D2RY-6379-A	Bolt - M10 x 22.5 - Flywheel to Crankshaft	5	6
17	84/	E5JL-7599-AA	Adapter - Pilot Bearing	1	
	86/	E9JL-7599-AA	Adapter - Pilot Bearing		1
18	84/	N605802-S100	Bolt - M10 x35 - Adapter to Flywheel	3	3
19	84/	E5JL-6394-AA	Housing - Flywheel - SAE 5 With Feet	1	1
20	84/	E800003-S72	Bolt - M10 x 45 UBS	2	2
	84/	N800057-S2	Bolt - M10 x 40 UBS	5	5
	84/	N801681-S100	Bolt - M10 x 25 UBS	5	5
21	84/	D1FZ-6397-B	Dowel	3	3
22	84/	7OHM-6397-AA	Dowel - Housing or Rear Engine Support to Block	2	2
23	84/	771M-6A373-AA	Plate - Rear Engine Upper	1	1
24	84/	E5JL-6366-AA	Plate - Rear Engine - Lower	1	1
25	86/	E6JL-6C322-AB	Stub Shaft Drive Plate	1	1
26	86/	N605787-S52	Bolt - M8 x 25	6	6

*Used on engines having a breaker point ignition system.

●Used on engines having a solid state ignition system.

★Used on engines having a distributorless ignition system.

▪Used on engines having a breaker point or a solid state distributor ignition.

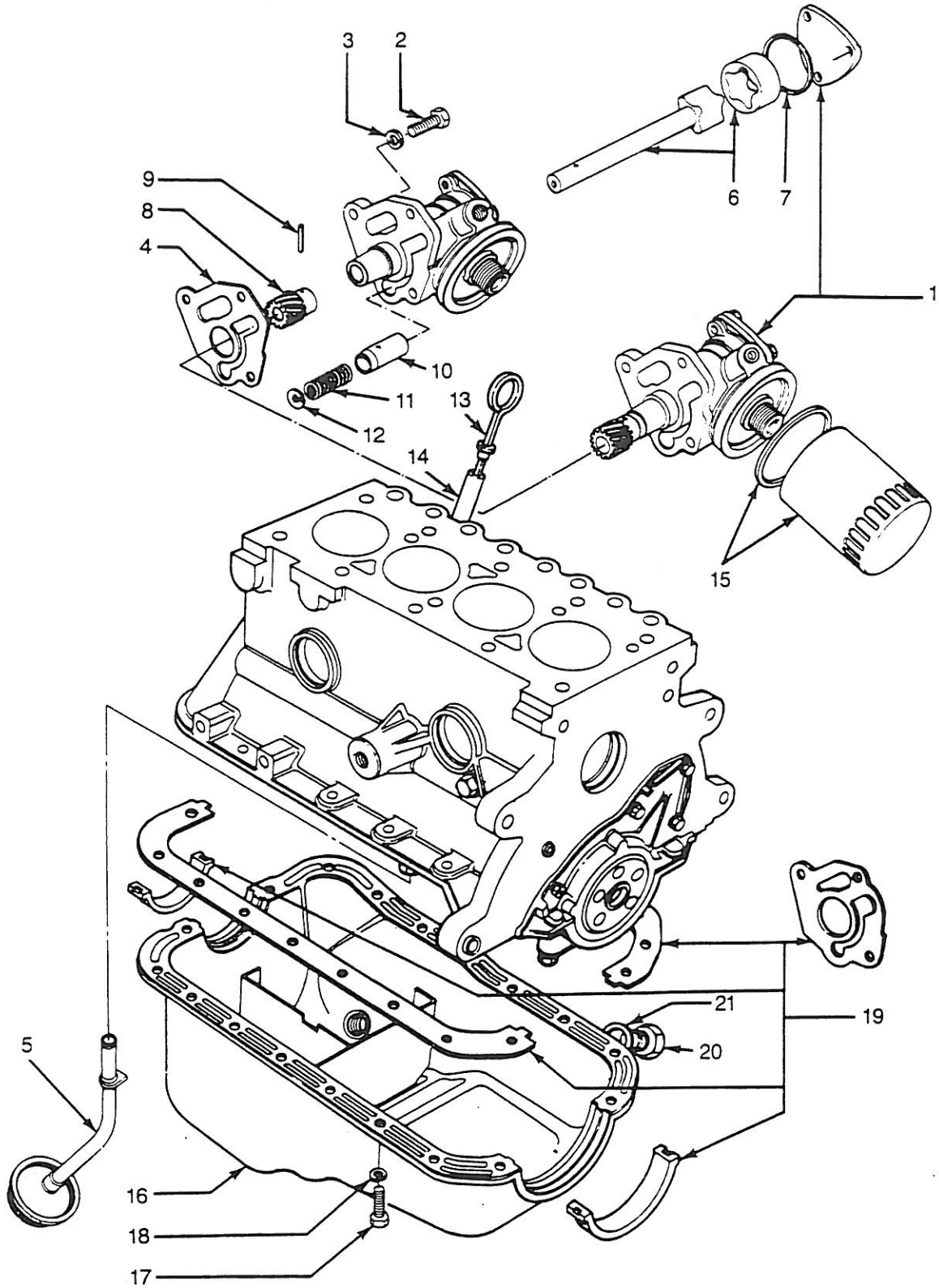

OIL PUMP, OIL PAN AND RELATED PARTS — TYPICAL

IE-484

NORTHERN POWER PRODUCTS, INC.

Jim FYI

Ford Power Products

Kubota Industrial Engines

August 14, 1997

xxxxx

Subject: Ford VSG-411/413 Engine Oil Pump & Filter Change

Dear Mike:

The Ford Valencia engine plant has changed the oil pump on the VSG-411 and VSG-413 engines. The filter relief valve has been deleted from the new pump. The pump part numbers are:

- Current Oil Pump - **77BM-6600-BA**
- New Oil Pump - **97BM-6600-AA**

This change has led to an oil filter redesign which incorporates a relief valve. Service oil filter part numbers are:

New Oil Filter	Current Oil Filter
97MM-6714-A1A	**77BM-6714-C1A**
97MM-6714A4A	**81SM-6714-A2A, A3A & A4A**

While they can be installed, ***do not use the old style filters on engines with the new pump***. Failure to do so could result in severe, non-warrantable, engine damage. It is okay to use the new oil filter on engines with the old style pumps.

We will start receiving engines with the new pumps later this year. If you have any questions, please give me a call. Thank you for your business!

Sincerely,

Mark R. Doebler
Sales Engineer

2815 Eagandale Blvd. P.O. Box 21348 Eagan, MN 55121-0348 • Phone (612) 452-8900 • Fax (612) 452-9182

Ford Power Products

REF NO.	YEAR	PART NUMBER	DESCRIPTION	QUANTITY 67	QUANTITY 79
			OIL PUMP, OIL PAN AND RELATED PARTS		
1	84/	D8RZ-6600-A	Pump - Oil - Includes Gear	1	1
2	84/89	E602188-S72	▪Bolt - M8 x 25	3	3
	89/	E800519-S72	★Bolt	3	3
3	84/	E630173-S71M	Washer - M8 Lock	3	3
4	84/	89BM-6659-AA	Gasket - Oil Pump to Block	1	1
5	84/86	77BM-6617-AD	*Tube Assembly - Oil Pickup (Not Replaced)	1	
	86/	86BM-6617-AA	Tube Assembly - Oil Pickup	1	1
6	84/	D1FZ-6608-B	Rotor and Shaft	1	1
7	84/	116682-ES	Seal - Cover Plate	1	1
8	84/	DORY-6652-A	Gear	1	1
9	84/	72432-S	Pin - Drive Gear	1	1
10	84/	DORY-6674-A	Plunger	1	1
11	84/	DORY-6670-A	Spring	1	1
12	84/	DORY-6666-A	Plug	1	1
13	84/89	D8RZ-6750-A	▪Indicator - Oil Level	1	1
	89/	92BM-6750-AA	Indicator - Oil Level	1	1
14	84/	89BM-6784-AA	Tube - Oil Level Indicator	1	1
15	84/	77BM-6714-C1A	Oil Filter - 3.11 Long (EFL-125)	1	1
	84/	E4FZ-6731-A	Oil Filter - 4.87 Long (FL-400-A)	1	1
16	84/92	77BM-6675-AC	Oil Pan - Includes Plug	1	
	92/	86BM-6675-AA	★Oil Pan - Includes Plug	1	
	86/	86BM-6675-AA	Oil Pan - Includes Plug		1
17	84/	E602165-S72	Bolt - M6 x 14 - Oil Pan	18	18
18	84/	34805-S8	Washer - 1/4 Lock	18	18
19	84/92	A76SX-6013-AA	Kit - Oil Pan Gasket	1	
	92/	A850X-6013-AA	★Kit - Oil Pan Gasket	1	
	86/	A850X-6013-AA	Kit - Oil Pan Gasket		1
20	84/	E9DZ-6730-B	Plug - Oil Drain	1	1
1	84/	E9DZ-6734-B	Gasket - Oil Pan Plug	1	1

*Used on engines having a breaker point ignition system.

★Used on engines having a distributorless ignition system.

▪Used on engines having a breaker point or a solid state distributor ignition.

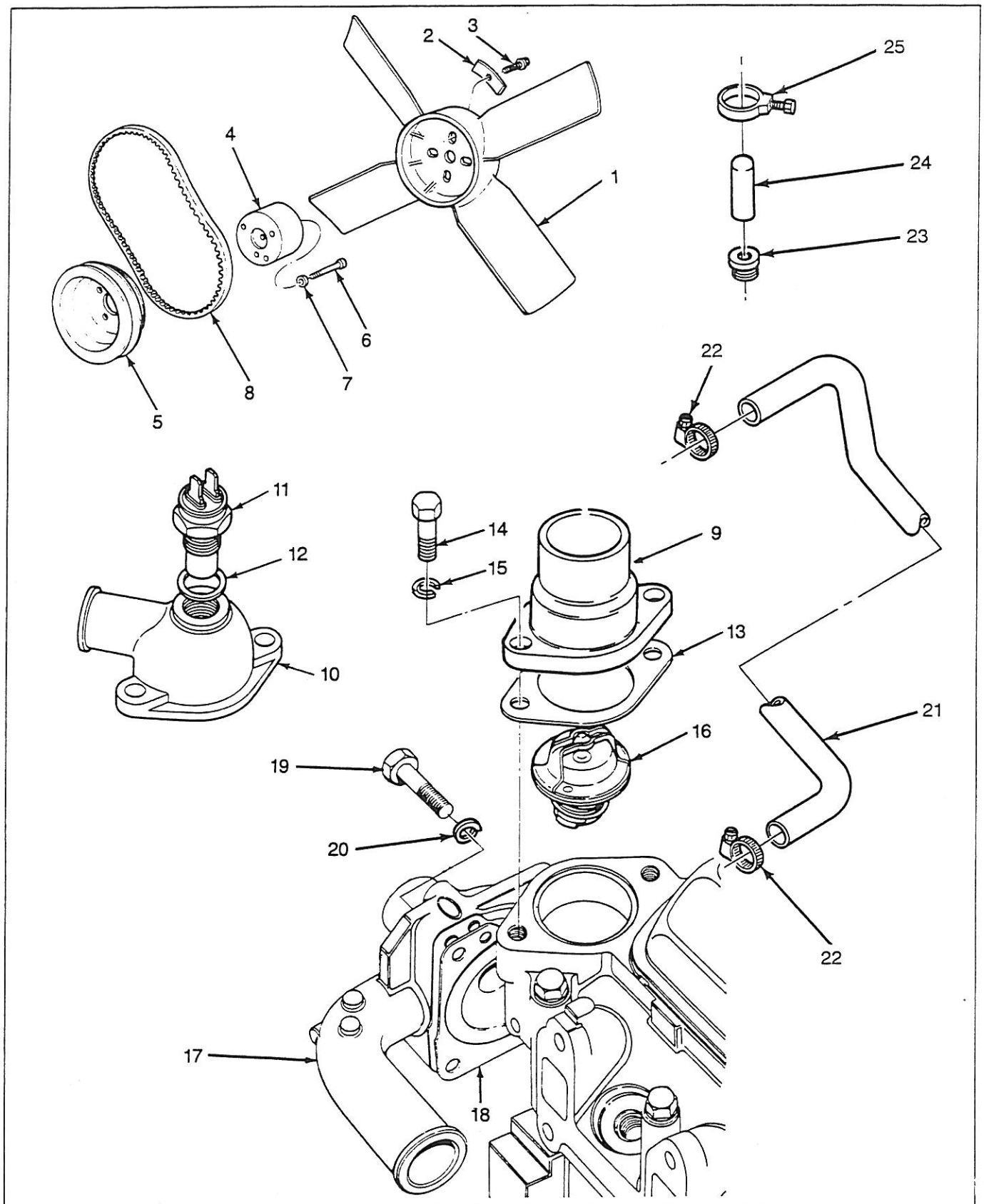

FAN, WATER PUMP, THERMOSTAT AND RELATED PARTS — TYPICAL

IE-485D

Ford Power Products

REF NO.	YEAR	PART NUMBER	DESCRIPTION	QUANTITY 67	QUANTITY 79
			FAN, WATER PUMP, THERMOSTAT AND RELATED PARTS		
1	86/	79VB-8600-CB	Fan - 7 Blade - 12.5 Inch Suction	1	1
	84/	D8BZ-8600-E	Fan - 4 Blade - 16.5 Inch Suction	1	1
	89/	E7JL-8600-AA	★Fan - 4 Blade - 14.5 Inch Suction	1	1
	84/	E8JL-8600-AA	Fan - 6 Blade - 15.0 Inch Pusher - 1.1 Pilot	1	1
2	84/	E5JL-8N603-AA	Strap - Fan	1	1
3	86/	N602733-S2	Bolt - M8 x 20 - Fan to Spacer - Use With 79VB-8600-CB Fan	3	3
	84/	N605905-S2	Bolt - M8 x 20	1	1
	84/	N605907-S2	Bolt - M8 x 30 - Fan to Spacer - Use With D8BZ-8600-E Fan	3	3
	84/	N805454-S2	Bolt - M6 x 22.5 - Fan to Spacer - Use With E8JL-8600-AA Fan	2	2
4	84/91	E5JL-8546-AA	✓Spacer - Fan - 1.70 Thick - .62 Pilot - Use With D8BZ-8600-E Fan	1	1
	86/91	E5JL-8546-BA	✓Spacer - Fan - .77 Thick - .93 Pilot - Use With 79VB-8600-CB Fan	1	1
	84/91	E8JL-8546-AB	✓Spacer - Fan - 1.70 Thick - 1.1 Pilot - Use With E8JL-8600-AA Fan	1	1
	91/	F1JL-8546-AB	★Spacer - Fan - .79 Thick - .35 Pilot - Use With E8JL-8600-AA And D8BZ-8600-E Fan.	1	1
	91/	F1JL-8546-BB	◆Spacer - Fan - .79 Thick - .35 Pilot - Use With 79VB-8600-CB Fan.	1	1
	91/	F1JL-8546-CB	♣Spacer - Fan - .59 Thick - M8 Threaded Pilot - Use with E8JL-8600-AA And D8BZ-8600-E Fan	1	1
	91/	F1JL-8546-DB	♣Spacer - Fan - 1.44 Thick - M8 Threaded Pilot - Use With D8BZ-8600-E Fan	1	1
	91/	F1JL-8546-EB	♣Spacer - Fan - 1.44 Thick - M8 Threaded Pilot - Use With E8JL-8600-AA Fan	1	1
5	84/91	77BF-8509-BA	Pulley - Water Pump - 1 Groove - Use With 88BX-8591-AA Water Pump	1	1
	91/	92BF-8509-AB	★Pulley - Water Pump - 1 Groove - Use With 92BX-8591-AA, BA Water Pump	1	1
	84/91	D8RZ-8509-A	Pulley - Water Pump - 2 Groove- Use With 88BX-8591-AA Water Pump	1	1
	91/	F1JL-8509-AC	★Pulley - Water Pump - 2 Groove - Use With 92BX-8591-AA, BA Water Pump	1	1
6	84/	E5JL-8B645-AA	Bolt - M6 x 45 - Spacer and Pulley to Water Pump - Use with E5JL-8456-AA And E8JL-8546-AB Spacers.	3	3
	84/	E602164-S72	Bolt - M6 x 12 - Pulley to Water Pump - Water Pump Mounted Fan When Spacer is Not Used	3	3
	86/	N800055-S	Bolt - M6 x 20	3	3
7	84/	E630025-S205	Washer - M6 Flat	3	3
8	84/	821F-6C301-AA	Belt - Water Pump and Alternator - 27/64 x 32-1/2	1	1
	86/	C9PZ-8620-E	Belt - Water Pump and Alternator - Power Unit - 15/32 x 34.00	1	1
9	84/	D7JL-8594-AA	Connection - Water Outlet - Vertical	1	1
10	84/	90BM-8592-AA	Connection - Water Outlet - 90 DEG	1	1
11	84/	81AB-8B607-A3A	Switch - Fan Motor	AR	AR
12	84/	E834047-S	Washer - 22.9 mm x 30.0 mm x 1.0 mm Flat	1	1
13	84/	D1FZ-8255-B	Gasket - Water Outlet	1	1
14	84/	E602187-S72	Bolt - M8 x 20	2	2
15	84/	E630173-S71M	Washer - M8 Lock	2	2
16	84/	C5TE-8575-B	Thermostat Assembly - 160 DEG	1	1

← NAPA 25-7340

★Used on engines having a distributorless ignition system.

✓Use With 88BX-8591-AA Water Pump

◆Use With F1JL-8509-AC 2 Groove Pulley And 92BX-8591-AA, BB Water Pump

♣Use With 92BF-8509-AB 1 Groove Pulley and 92BX-8591-AA, BA Water Pump

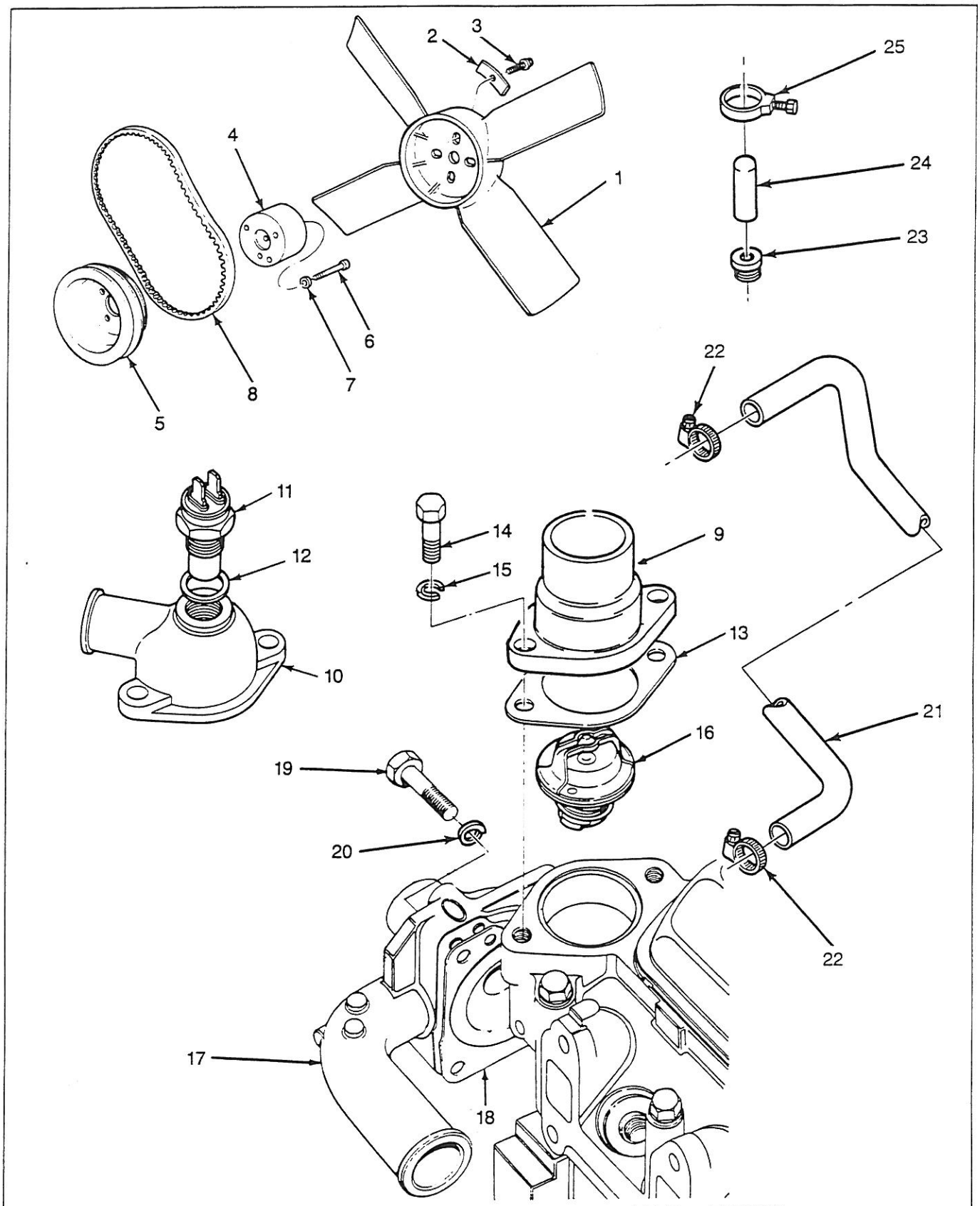

FAN, WATER PUMP, THERMOSTAT AND RELATED PARTS — TYPICAL

IE-485D

Ford Power Products

FAN, WATER PUMP, THERMOSTAT AND RELATED PARTS (Cont'd)

REF NO.	YEAR	PART NUMBER	DESCRIPTION	QUANTITY 67	QUANTITY 79
16	84/	D4PZ-8575-A	Thermostat Assembly - 190 DEG	1	1
17	84/89	D8RZ-8501-A	■Water Pump - Includes Gasket	1	1
	89/	92BX-8591-AA	★Water Pump - Includes Gasket	1	1
	89/	92BX-8591-BA	★Kit - Water Pump and 1 Groove Pulley	1	1
18	84/89	D8RZ-8507-A	■Gasket - Water Pump	1	1
	89/	89BM-8507-AA	★Gasket - Water Pump	1	1
19	84/	E600113-S72	Bolt - M6 x 40 - Front Cover and W/P to Block	3	3
20	84/	E832108-S71M	Washer - M6 Lock	3	3
21	84/	E9JL-8548-CA	Hose - By-Pass	1	1
22	84/	383522-S	Clamp - Hose - 1.12	2	2
23	84/	E6JL-8A574-AA	Plug - M22 - Less Fan Motor Switch	1	1
24	84/	C9AZ-9C492-A	Cap - Water Outlet Nipple	1	1
25	84/	C9AZ-8287-A	Clamp - Hose	2	2

★Used on engines having a distributorless ignition system.

■Used on engines having a breaker point or a solid state distributor ignition.

REFER TO PRODUCT MODIFICATION BULLETIN #217 DATED MAY 10, 1991 FOR ADDITIONAL INFORMATION AND ASSISTANCE WITH IDENTIFICATION OF THE WATER PUMP EQUIPPED ON YOUR ENGINE. SEE SKETCH BELOW.

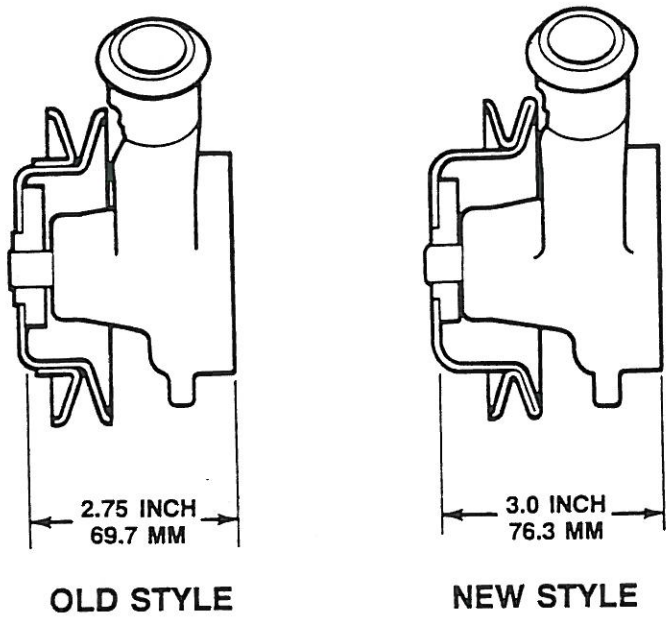

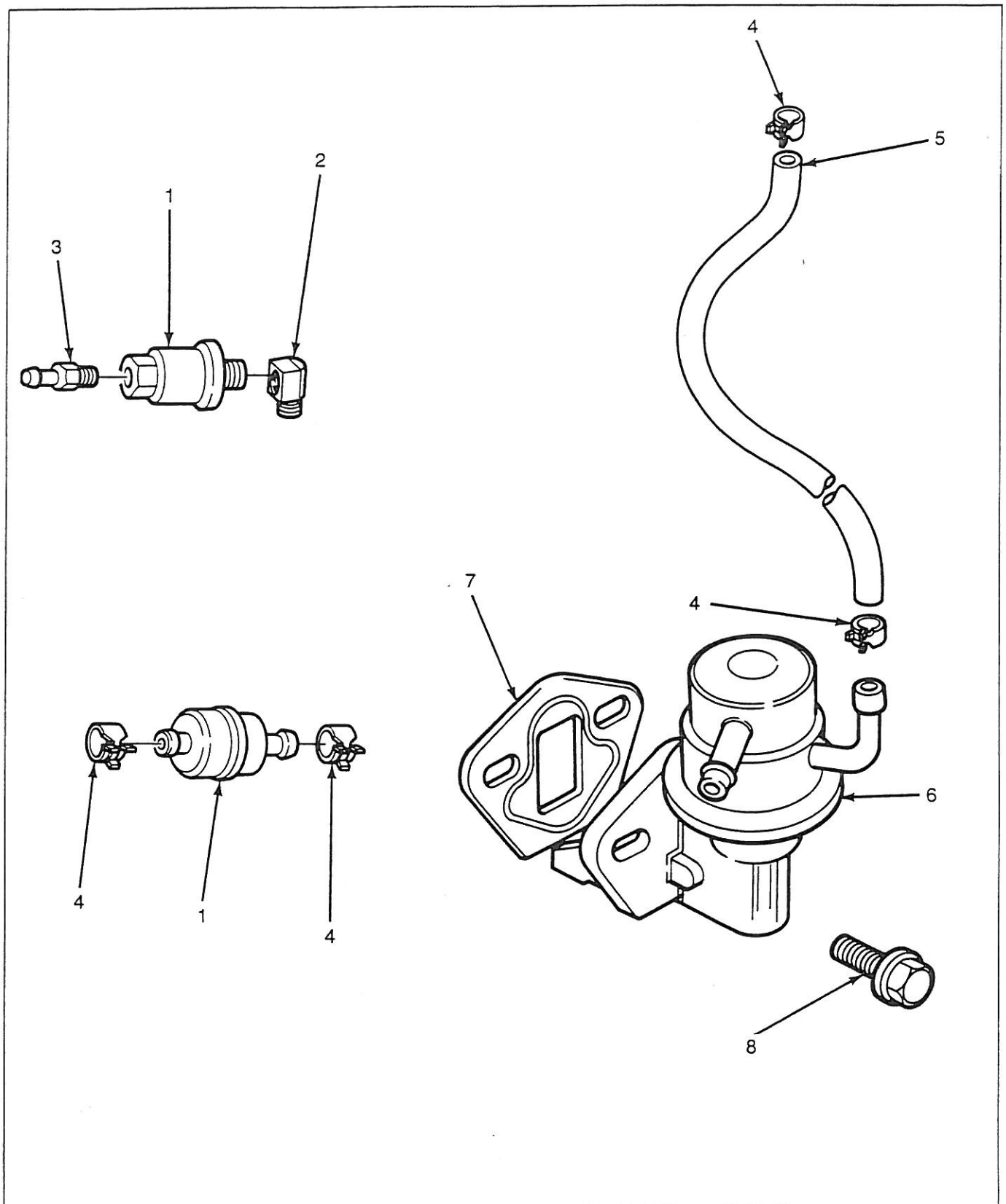

FUEL FILTER, FUEL PUMP AND RELATED PARTS — TYPICAL

IE-486B

Ford Power Products

REF NO.	YEAR	PART NUMBER	DESCRIPTION	QUANTITY 67	QUANTITY 79
			FUEL FILTER, FUEL PUMP AND RELATED PARTS		
1	84/89	C2RZ-9155-A	■Filter Assembly - Fuel	1	1
	89/	E3FZ-9155-F	★Filter Assembly - Fuel	1	1
2	89/	370829-S101	★Elbow - 90 Degree 1/8-27	1	1
3	89/	EOJL-9A520-AA	★Adapter	1	1
4	84/	380882-S32	Clamp - Fuel Hose	AR	AR
5	84/89	E1PZ-9324-B	■Hose - Fuel - 25 Ft. Roll - 5/16 ID - Improvise as Required	AR	AR
	89/	381103-S180A	★Hose - Fuel 5/16 I.D. x 18	1	1
6	84/	83BF-9350-AA	Fuel Pump	1	1
7	84/	83BM-9417-A1A	Gasket - Fuel Pump	1	1
8	84/	N602551-S2	Screw and Washer - M8 x 30	2	2

★Used on engines having a distributorless ignition system.

■Used on engines having a breaker point or a solid state distributor ignition.

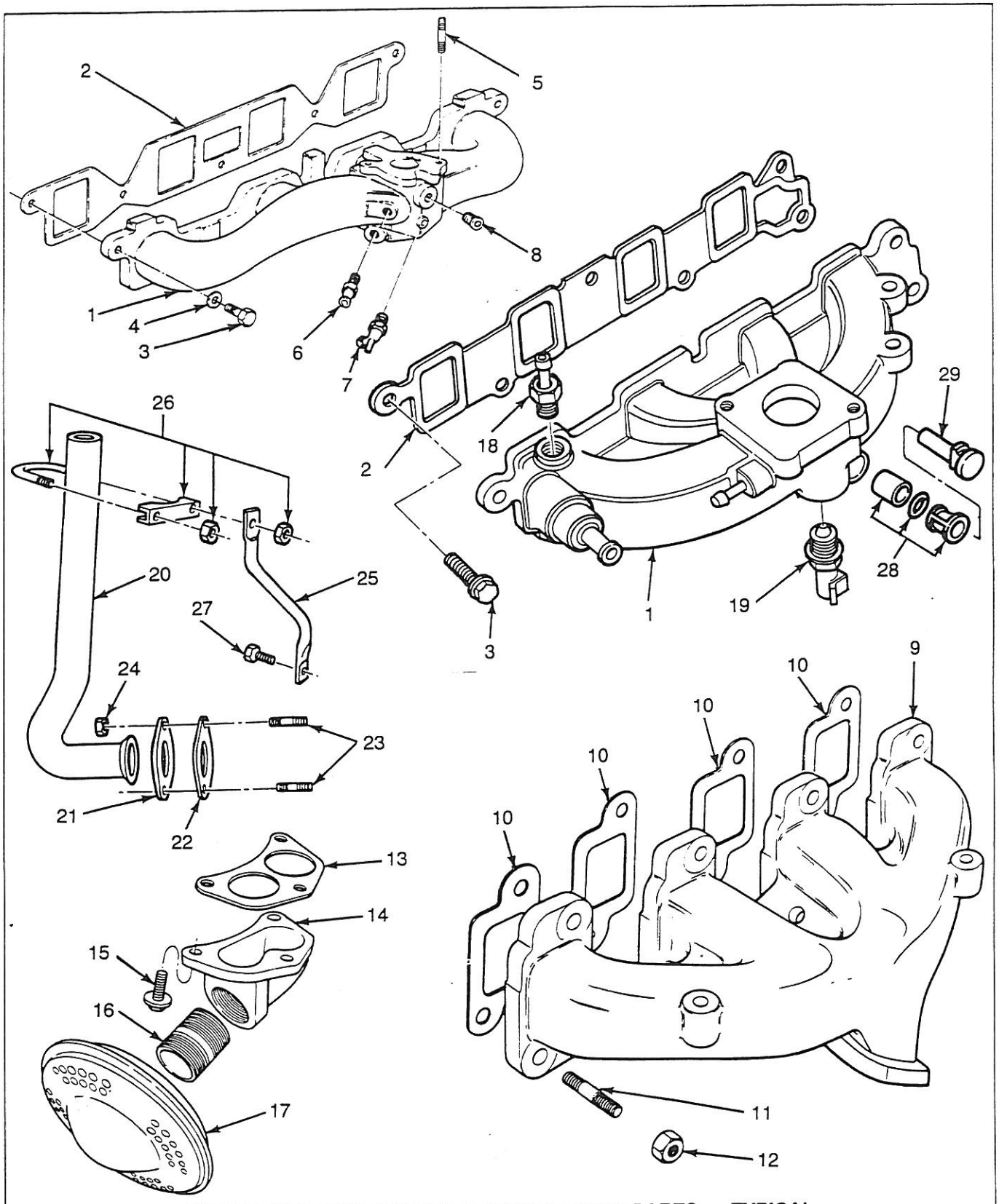

INTAKE, EXHAUST MANIFOLD AND RELATED PARTS — TYPICAL

IE-487C

Ford Power Products

INTAKE, EXHAUST MANIFOLD AND RELATED PARTS

REF NO.	YEAR	PART NUMBER	DESCRIPTION	QUANTITY 67	QUANTITY 79
1	84/89	79BF-9425-BC	▪Manifold - Intake (Not Replaced)	1	
	86/89	86BF-9425-FB	●Manifold - Intake		1
	89/	89BF-9424-AD	★Manifold - Intake	1	1
2	84/89	77BM-9441-DA	▪Gasket - Intake Manifold	1	1
	89/	89BM-9441-AB	★Gasket - Intake Manifold	1	1
3	84/89	E602188-S72	▪Bolt - M8 x 25	5	5
	89/	E800157-S72	★Bolt - M8 x 25	6	6
4	84/89	E630173-S71M	▪Washer - M8 Lock	5	5
5	84/89	E804820-S72	▪Stud - M8 x 95 - Carburetor to Manifold	1	1
	84/89	E805021-S72	▪Stud - M8 x 54 - Carburetor to Manifold	1	1
6	84/89	377665-S7-8	▪Adapter - 3/8-18	1	1
7	84/89	72EG-2A411-BA	▪Connector - 1/4-18	1	1
8	84/89	F1ZZ-6026-A	▪Plug - 1/4 NPT	AR	AR
9	84/89	84BF-9430-BA	▪Manifold - Exhaust	1	1
	89/	E8JL-9430-AA	★Manifold - Exhaust - Side Outlet	1	1
	89/	E8JL-9430-BA	★Manifold - Exhaust - Down Outlet	1	1
	89/	E8JL-9430-CA	★Manifold - Exhaust - Up Outlet	1	1
10	84/89	77BM-9448-EA	▪Gasket - Exhaust Manifold	4	4
	89/	89BM-9448-BA	★Gasket - Exhaust Manifold	4	4
11	84/	E805697-S76	Stud - M8 x 27.5 - Exhaust Manifold to Cylinder Head	8	8
12	84/	N620481-S2	Nut - M8 UBS	8	8
13	84/89	84FB-9451-AB	▪Gasket - Exhaust Pipe Flange to Manifold	1	1
14	84/89	E5JL-5B255-AA	▪Adapter - Muffler	1	1
15	84/89	N802594-S161	▪Bolt - M10 x 28.5 - Adapter to Manifold	3	3
16	84/89	E5JL-5D209-AA	▪Nipple - Adapter to Muffler - 1.25 NPT x 1.60 Long	1	1
	84/89	E5JL-5D209-BA	Nipple - Adapter to Muffler - 1.25 NPT x 2.0 Long	1	1
17	84/89	E5JL-5230-AA	▪Muffler	1	1
18	89/	77BF-9K442-AA	★Adapter - Vacuum Line	1	1
19	89/	E1AZ-12A648-A	★Sensor - Water Temperature	1	1
20	89/	E9JL-5246-AA	★Pipe - Exhaust	1	1
21	89/	D12A-5269-AB	★Flange - Exhaust Pipe	1	1
22	89/	D1RY-9450-A	★Gasket - Exhaust Pipe Flange to Manifold	1	1
23	89/	E804203-S100	★Stud - Exhaust Pipe to Manifold	2	2
24	89/	E620014-S83	★Nut - Exhaust Pipe to Manifold	2	2
25	89/	E9JL-5A235-AA	★Brace - Exhaust Pipe to Manifold	1	1
26	89/	D1AZ-5A231-D	★Clamp - Exhaust Pipe to Bracket	1	1
27	89/	E602185-S72	★Bolt - M8 x 14	1	1
28	89/	87AB-2A411-BA	★Kit - Intake Manifold Plug	1	1
29	89/	87AB-9H490-AA	★Plug	1	1

●Used on engines having a solid state ignition system.

★Used on engines having a distributorless ignition system.

▪Used on engines having a breaker point or a solid state distributor ignition.

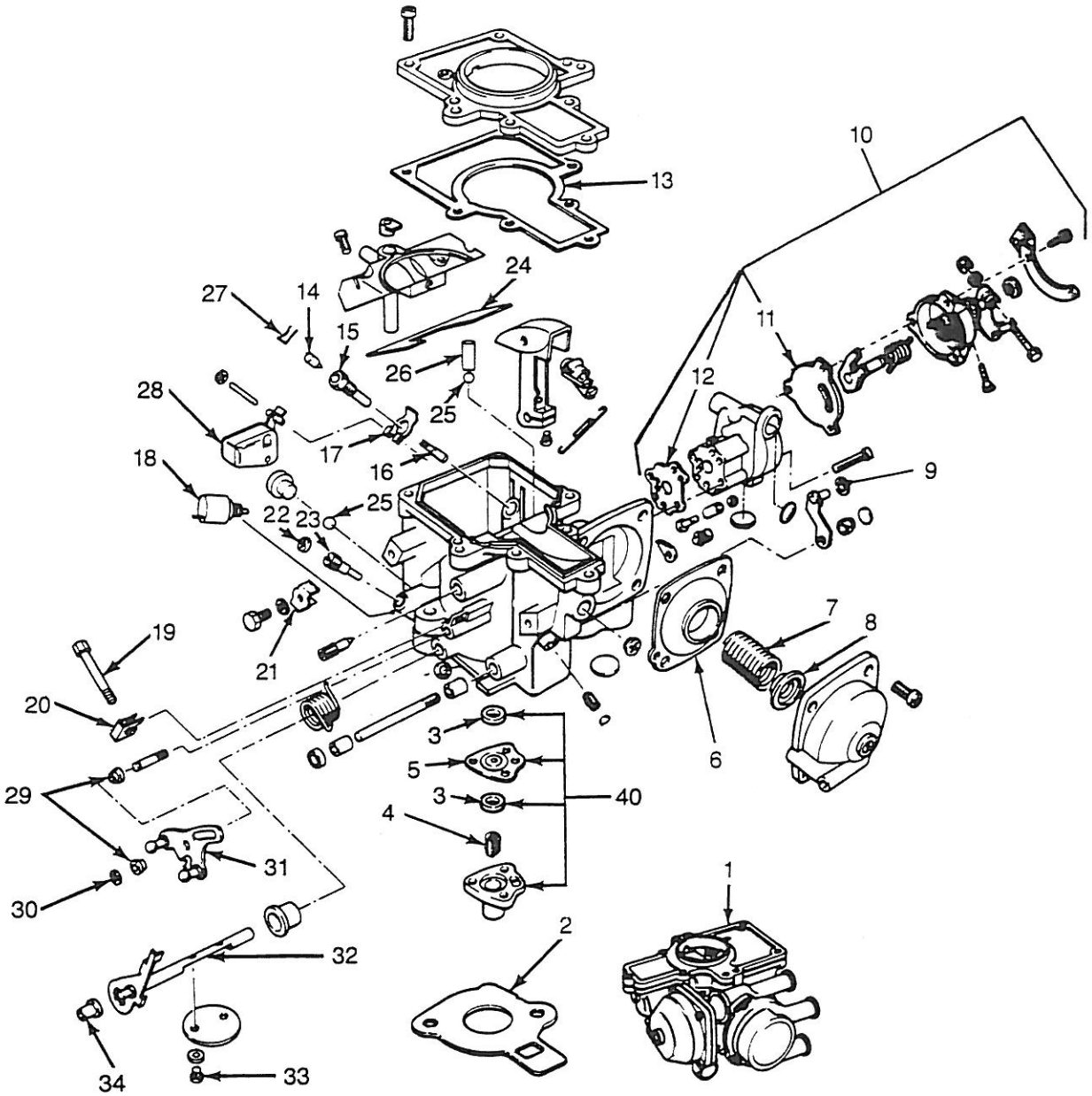

CARBURETOR AND RELATED PARTS — VARIABLE VENTURI — TYPICAL

IE-488C

Ford Power Products

REF NO.	YEAR	PART NUMBER	DESCRIPTION	QUANTITY 67	QUANTITY 79
			CARBURETOR ASSEMBLY AND RELATED PARTS- VARIABLE VENTURI		
1	84/86	84BF-9510-KJA	*Carburetor Assembly	1	
	86/88	86BF-9510-KEA	•Carburetor Assembly		1
2	84/88	79BF-9447-KAD	▪Gasket - Carburetor	1	1
3	84/88		Seal - Accelerator Pump - Kit Only - Ref. No. 40	1	1
4	84/88	79BF-9936-KAD	▪Spring - Accelerator Pump	1	1
5	84/88		Diaphragm - Accelerator Pump - Kit Only - Ref. No. 40	1	1
6	84/88	79BF-9A900-KAD	▪Diaphragm - Venturi Valve	1	1
7	84/88		▪Spring - Venturi Valve (Not Replaced)	1	1
8	84/88	79BF-9A906-KAA	▪Guide - Venturi Valve Diaphragm Spring	1	1
9	84/86	97407-S76	*Clip - Venturi Valve Lever	1	1
10	84/88	84BF-9S597-KAB	▪Choke Assembly - Complete - Includes Gaskets, Screws, Etc.	1	
	86/88	84SF-9S597-KBB	•Choke Assembly - Complete - Includes Gaskets, Screws, Etc.		1
11	84/88	82BF-9P951-KAA	▪Gasket - Choke Cover to Body	1	1
12	84/88	85BF-9853-KAA	▪Gasket - Choke Assembly to Carburetor	1	1
13	84/88	80BF-9561-KAA	▪Gasket - Carburetor Cover	1	1
14	84/88	79BF-9B528-KAD	▪Needle Valve - Fuel Inlet	1	1
15	84/88	79BF-9567-KAD	▪Seat - Needle Valve	1	
	86/88	86BF-9567-KAA	•Seat - Needle Valve (Not Replaced)	1	1
16	84/88	79BF-9F525-KAC	▪Filter - Fuel Inlet	1	1
17	84/88	79BF-9S568-KAF	▪Bracket - Float Lever (Not Replaced)	1	1
18	84/88	84FB-9K765-BA	▪Solenoid - Shut Down - M8 Thread - Threaded Post for Connection to Harness	1	1
19	84/88	E805001-S72	▪Screw - Idle Speed Adj. (Not Replaced)	1	1
20	84/88	E866055-S81	▪Clip - Idle Speed Lock (Not Replaced)	1	1
21	84/88	81SF-9D548-KAB	▪Bracket - Idle Speed Adj. Screw	1	1
22	84/88	E857037-S	▪Plug - Idle Adjustment Screw (Not Replaced)	1	1
23	84/88	84BF-9B538-KAA	▪Screw - Idle Adjustment	1	1
24	84/88	79BF-9A518-KAC	▪Gasket - Main Body (Not Replaced)	1	1
25	84/88	370920-S	▪Ball - 5/32 Steel (Not Replaced)	2	2
26	84/88	C6BH-9B511-A	▪Weight	1	1
27	84/88	82BF-9959-KAB	▪Retainer	1	1
28	84/88	79BF-9550-KBG	▪Float Assembly	1	1
29	84/88	79BF-9B508-KAA	▪Bushing	2	2
30	84/88	E864874-S81	▪Clip	1	1
31	84/88	83BF-9B742-KAA	▪Lever Assembly - Throttle	1	1
32	84/88	79BF-9581-KAJ	▪Shaft - Throttle	1	1
33	84/88	E400219-S76	▪Screw - Throttle Plate to Shaft (Not Replaced)	2	2
34	84/88	79BF-9H586-KAA	▪Spacer - Throttle Lever to Shaft	1	1
35	86/88	E830868-S71	•Washer - Steel - Not Illustrated (Not Replaced)	1	1
36	86/88	E854218-S	•O-Ring - Neoprene - Not Illustrated (Not Replaced)	1	1
37	86/88	86BF-9C283-KAA	•Banjo and Tube Assembly - Not Illustrated	1	1
38	86/88	E853102-S	•Washer - Copper - Not Illustrated (Not Replaced)	1	1
39	86/88	86BF-9D283-KAA	•Tube - Inlet - Not Illustrated	1	1
40	84/88	84BF-9E885-KAA	▪Kit - Accelerator Pump Diaphragm	1	1
41	86/88	382443-S	•Cap - Rubber	1	1
42	86/88	378756-S32	•Clamp - Rubber Cap - Not Illustrated	1	1

*Used on engines having a breaker point ignition system.

•Used on engines having a solid state ignition system.

▪Used on engines having a breaker point or a solid state distributor ignition.

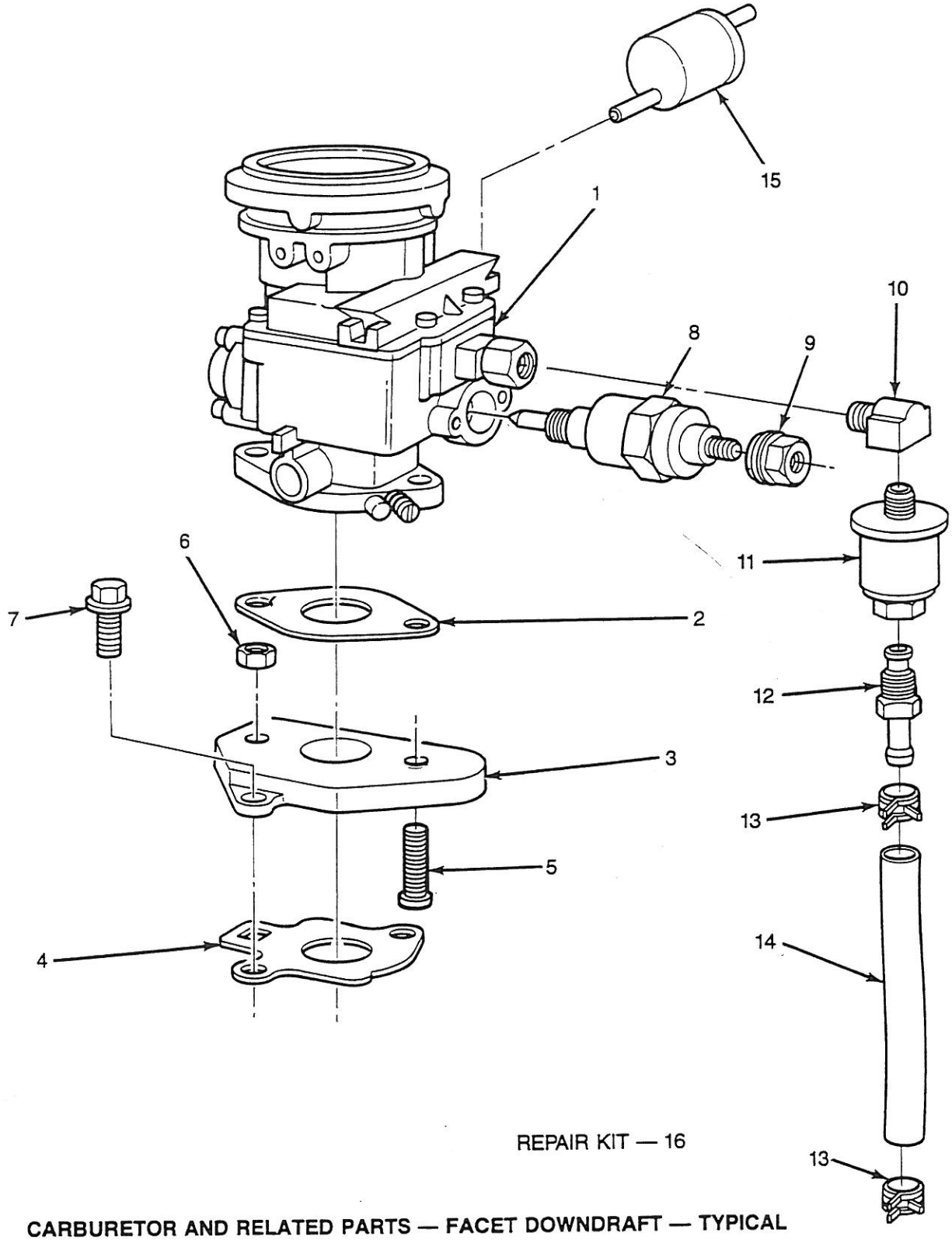

REPAIR KIT — 16

CARBURETOR AND RELATED PARTS — FACET DOWNDRAFT — TYPICAL

IE-524A

Ford Power Products

REF NO.	YEAR	PART NUMBER	DESCRIPTION	QUANTITY 67	QUANTITY 79
			CARBURETOR ASSEMBLY AND RELATED PARTS - DOWNDRAFT		
1	87/88	E6JL-9510-MB	•Carburetor Assembly - With Solenoid	1	
	87/88	E6JL-9510-NB	•Carburetor Assembly - Without Solenoid	1	
	88/89	E7JL-9510-FB	•Carburetor Assembly - With Solenoid - With L.H. Choke Cable		1
	88/89	E7JL-9510-JB	•Carburetor Assembly - With Solenoid	1	
	88/89	E7JL-9510-KB	•Carburetor Assembly - Without Solenoid - With L.H. Choke Cable	1	
	88/89	E7JL-9510-LB	•Carburetor Assembly - With Solenoid - With L.H. Choke Cable		1
	88/89	E7JL-9510-MB	•Carburetor Assembly - Without Solenoid		1
	88/89	E9JL-9510-AA	•Carburetor Assembly - Derated - With Solenoid	1	
	89/	E9JL-9510-GA	★Carburetor Assembly - Without Solenoid	1	1
	89/	E9JL-9510-HA	★Carburetor Assembly - With Solenoid And Filter	1	1
	89/	E9JL-9510-KA	★Carburetor Assembly - With Solenoid And Auto Choke	1	1
2	89/	79BF-9447-KAD	★Gasket - Carburetor	1	1
	89/	E5JL-9447-BA	★Gasket - Carburetor to Adapter - Use with E9JL-9510 Carburetors	1	1
3	89/	E6JL-9A589-AA	★Adapter - Carburetor to Manifold - Use with E6JL-9510 and E7JL-9510 Carburetors	1	1
	89/	E8JL-9A589-CB	★Adapter - Carburetor to Manifold - Use with E9JL-9510 Carburetors	1	1
4	89/	87BF-9447-BA	★Gasket - Carburetor - Use with E8JL-9510-EA and F1JL-9510FA Carburetors	1	1
5	89/	E804216-S	★Stud - M8 x 29.5 - Carburetor to Adapter	2	2
6	89/	N620041-S51	★Nut - M8 - Carburetor To Adapter	2	2
7	89/	N605905-S2	Bolt - M8 x 20	2	2
	89/	N800055-S	★Bolt - M6 x 20	2	2
8	89/	84FB-9K765-BA	★Solenoid - Shut Down - M8 Thread - Threaded Post for Connection to Harness	1	1
9	89/	N621903-S2	★Nut and Washer - M5 - Solenoid Post	1	1
10	89/	370829-S101	★Elbow - 90 Degree 1/8-27	1	1
11	89/	E3FZ-9155-F	★Filter Assembly - Fuel	1	1
12	89/	E0JL-9A520-AA	★Fitting - Carburetor Fuel Inlet Hose	1	1
13	89/	380882-S100	★Clamp - Hose	2	2
14	89/	381103-S180A	★Hose - Fuel 5/16 I.D. x 18	1	1
15	89/	D4FZ-9C369-A	★Separator Assembly - Fuel	1	1
			REPAIR KIT - FACET DOWNDRAFT CARBURETOR		
16	89/	E9JL-9590-AA	★Kit - Carburetor Repair	1	1
	89/	E9JL-9590-BA	★Kit - Carburetor Enchancement	1	1

•Used on engines having a solid state ignition system.

★Used on engines having a distributorless ignition system.

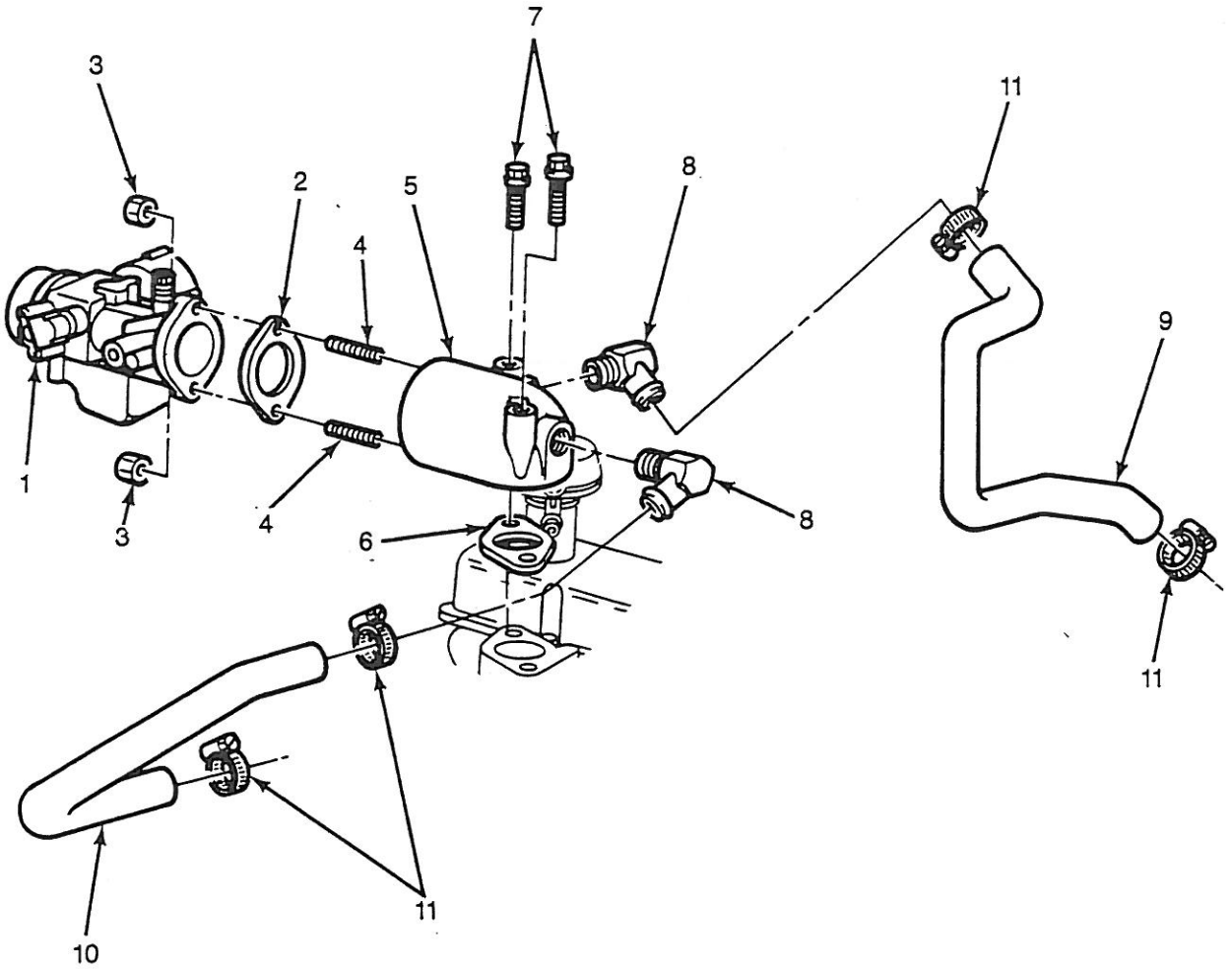

REPAIR KIT — 12

CARBURETOR ASSEMBLY AND RELATED PARTS
TYPICAL — SIDEDRAFT

IE-558A

Ford Power Products

REF NO.	YEAR	PART NUMBER	DESCRIPTION	QUANTITY 67	QUANTITY 79
			CARBURETOR ASSEMBLY AND RELATED PARTS - SIDEDRAFT		
1	88/89	E8JL-9510-EA	•Carburetor Assembly - With Solenoid And Auto Choke	1	1
	88/89	E8JL-9510-FA	•Carburetor Assembly - Standard	1	1
	88/89	E8JL-9510-GA	•Carburetor Assembly - 1800 RPM - With Solenoid And Auto Choke	1	
	88/89	E8JL-9510-HA	•Carburetor Assembly - 1800 RPM - With Solenoid And Auto Choke		1
	88/89	F1JL-9510-FA	•Carburetor Assembly - With Solenoid And Manual Choke	1	1
2	88/89	79BF-9447-KAD	•Gasket - Carburetor	1	1
	88/89	87BF-9447-BA	•Gasket - Carburetor - Use with E8JL-9510-EA and F1JL-9510FA Carburetors	1	1
3	88/89	N620041-S51	•Nut - M8 - Carburetor To Adapter	2	2
4	88/89	E804216-S	•Stud - M8 x 29.5 - Carburetor to Adapter	2	2
5	88/89	E7JL-9485-AA	•Adaptor - Carburetor To Manifold	1	1
	88/89	E8JL-9485-AA	•Adaptor - Carburetor To Manifold - Use with E8JL-9510-EA and F1JL-9510-FA Carburetors	1	1
6	88/89	D7JL-9447-D	•Gasket - Adaptor To Manifold	1	1
7	88/89	1508268	•Bolt - M8 x 60	1	1
	88/89	E600222-S72	•Bolt - M8 x 90	1	1
	88/89	E802641-S72	•Bolt - M6 x 95 - Use with E8JL-9510-EA and F1JL-9510-FA Carburetors	2	2
8	88/89	357863-S100	•Elbow - 90 Degree	2	2
9	88/89	E9JL-8548-BB	•Hose - Water Bypass - Adaptor To Water Pump - Use with E8JL-9510-EA and F1JL-9510-FA Carburetors	1	1
10	88/89	E9JL-8548-AA	•Hose - Water Bypass - Adaptor to Intake Manifold - Use with E8JL-9510-EA and F1JL-9510-FA Carburetors	1	1
11	88/89	383522-S	•Clamp - Hose - 1.12	4	4
12	88/89	E9JL-9590-AA	•Kit - Carburetor Repair	1	1
			•Used on engines having a solid state ignition system.		

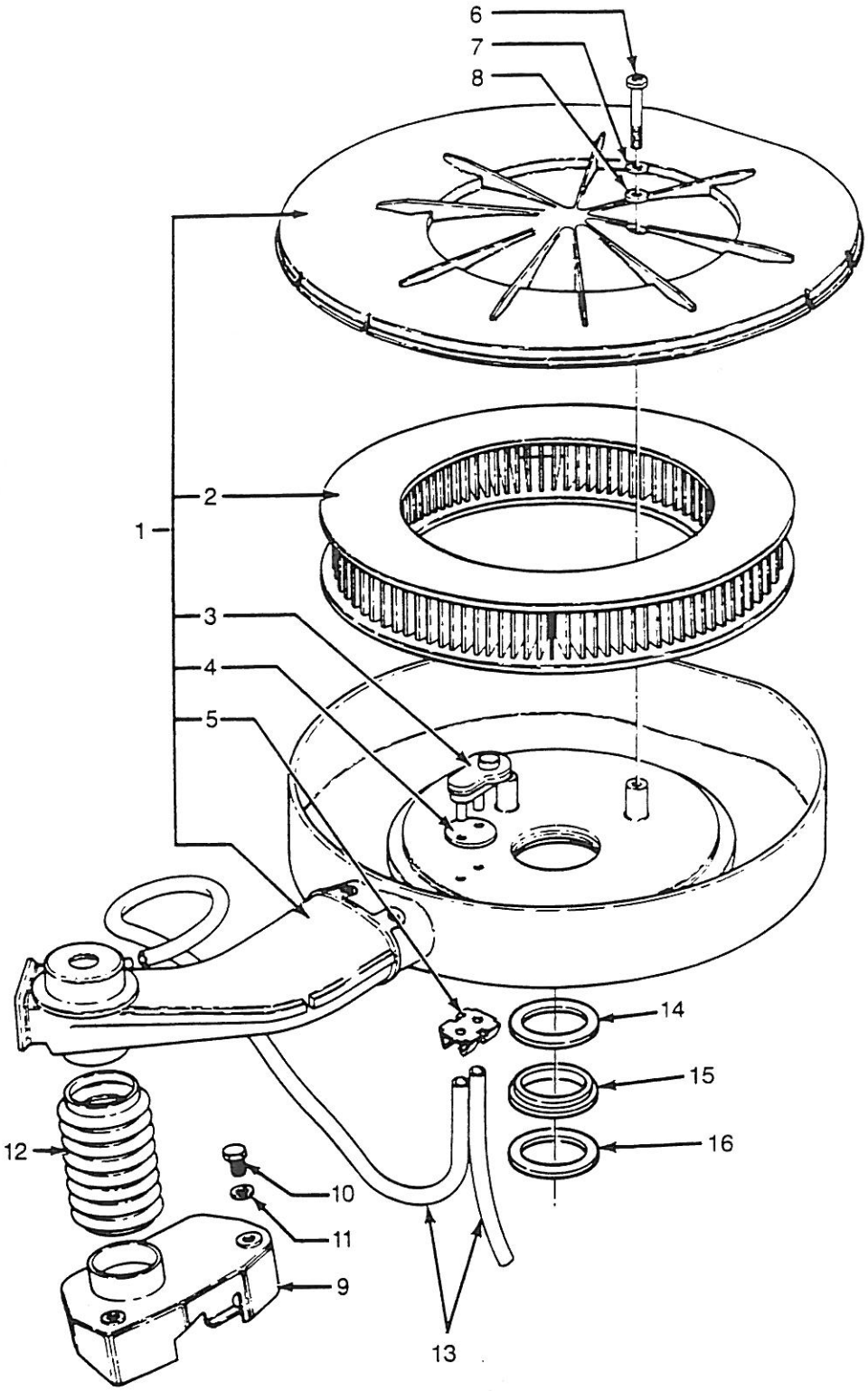

AIR CLEANER AND RELATED PARTS — TYPICAL IE-489A

Ford Power Products

REF NO.	YEAR	PART NUMBER	DESCRIPTION	QUANTITY 67	QUANTITY 79
			AIR CLEANER AND RELATED PARTS - FOR USE WITH VARIABLE VENTURI CARBURETOR		
1	84/86	84SF-9600-AA	*Air Cleaner Assembly	1	
	86/89	86BF-9600-AA	●Air Cleaner Assembly	1	1
2	84/89	79BF-9601-AA	▪Element - Air Cleaner	1	1
3	84/86	82TF-9E607-AA	*Sensor	1	
4	84/86	75TF-9E608-AA	*Gasket - Sensor	1	
5	84/86	E464052-S81	*Retainer - Sensor	1	
6	86/89	E6JL-9K668-AA	●Screw - M6 x 90 - Air Cleaner Retaining		2
	84/89	E802258-S76	▪Screw - M6 x 63 - Air Cleaner Retaining	2	
7	84/89	E630025-S205	▪Washer - M6 Flat	2	2
8	84/89	E834066-S	▪Washer - Rubber	2	2
9	84/86	84SF-9K632-AA	*Shroud - Pre-Heater	1	
	86/89	86BF-9K632-AA	●Shroud - Pre-Heater	1	1
10	84/89	E602185-S72	▪Bolt - M8 x 14	2	2
11	84/89	E630027-S101	▪Washer - M8 Flat	2	2
12	84/86	80BF-9K634-BA	*Hose - Pre-Heater	1	
	86/89	86BF-9K634-AA	●Hose - Pre-Heater	1	1
13	84/86		Tube - Vacuum - .125 x 21.65 (Not Serviced)	1	
14	84/89	E5JL-9K609-AA	▪Seal - "O" Ring - Air Cleaner to Carburetor or Adapter	1	1
15	86/89	E6JL-9B663-BA	●Adapter - Air Cleaner to Carburetor		1
16	86/89	E6JL-9654-AA	●Gasket - Adapter to Carburetor		1

*Used on engines having a breaker point ignition system.

●Used on engines having a solid state ignition system.

▪Used on engines having a breaker point or a solid state distributor ignition.

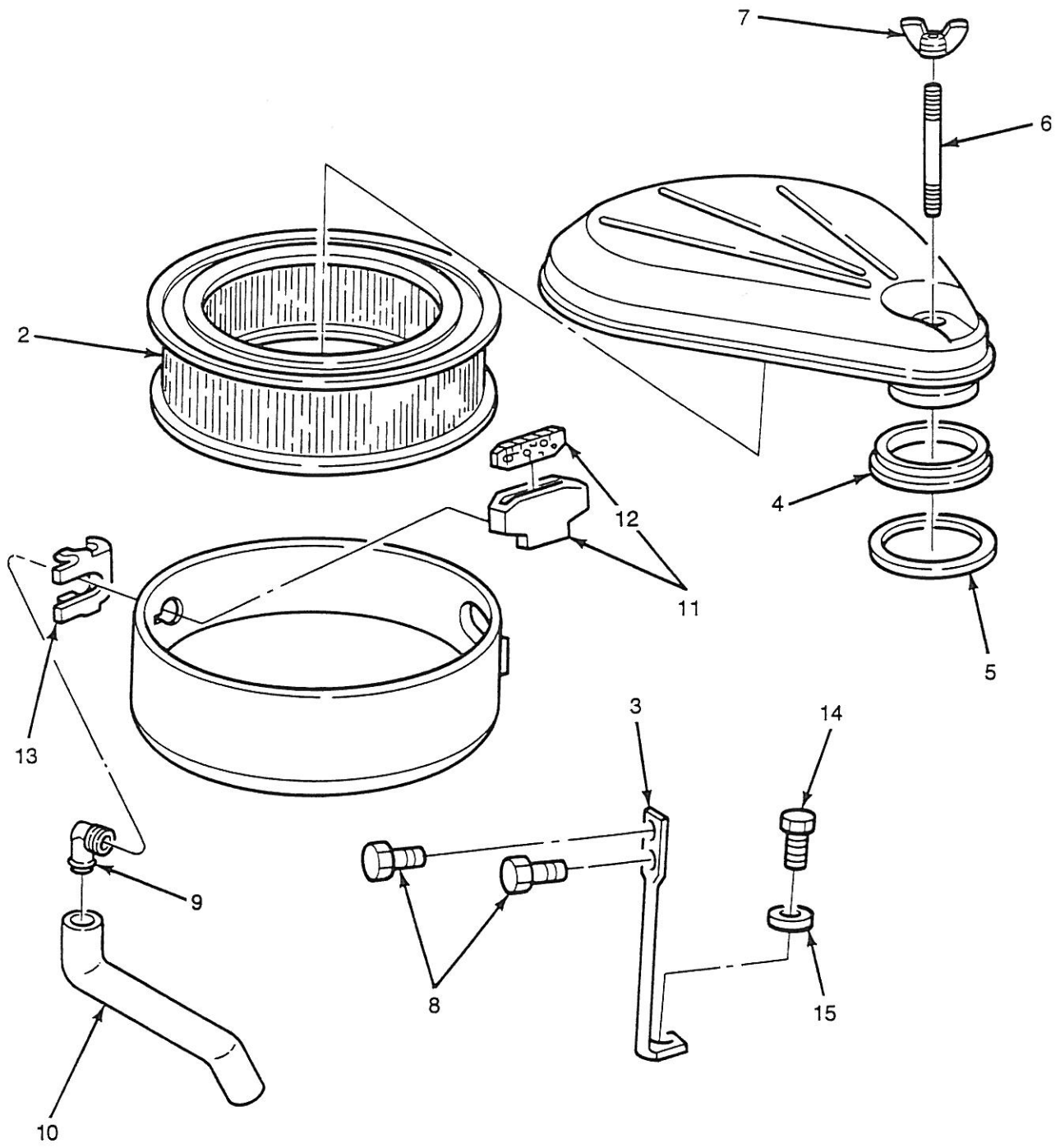

COMPLETE ASSEMBLY — 1

AIR CLEANER AND RELATED PARTS — TYPICAL

IE-523B

Ford Power Products

REF NO.	YEAR	PART NUMBER	DESCRIPTION	QUANTITY 67	QUANTITY 79
			AIR CLEANER AND RELATED PARTS - FOR USE WITH FACET DOWNDRAFT CARBURETOR		
1	89/	EOTZ-9600-H	★Air Cleaner - Offset Dry Type	1	1
2	89/	EOTZ-9601-B	★Element - Air Cleaner	1	1
3	89/	E8JL-9B611-AA	★Brace - Air Cleaner	1	1
4	89/	E8JL-9A621-AA	★Adapter - Carburetor to Air Cleaner	1	1
5	89/	E9JL-9654-AA	★Gasket - Adapter to Carburetor	1	1
6	89/	382462-S100	★Stud - 1/4-20-20 x 2.375 - Air Cleaner to Carburetor	1	1
7	89/	386285-S	★Nut - 1/4-20 Wing - Air Cleaner to Carburetor	1	1
8	89/	57633-S2	★Screw and Washer - 5/16-18 x .75	2	2
9	89/	383259-S	★Elbow - Crankcase Vent Hose	1	1
10	89/	E8JL-6853-BA	★Hose - Crankcase Vent	1	1
11	89/	D7FZ-9D695-A	★Filter Assembly	1	1
12	89/	D7FZ-9D697-A	★Filter	1	1
13	89/	D1AZ-9E628-B	★Retainer	1	1
14	89/	E602185-S72	★Bolt - M8 x 14	1	1
15	89/	E630027-S101	Washer - M8 Flat	1	1

★Used on engines having a distributorless ignition system.

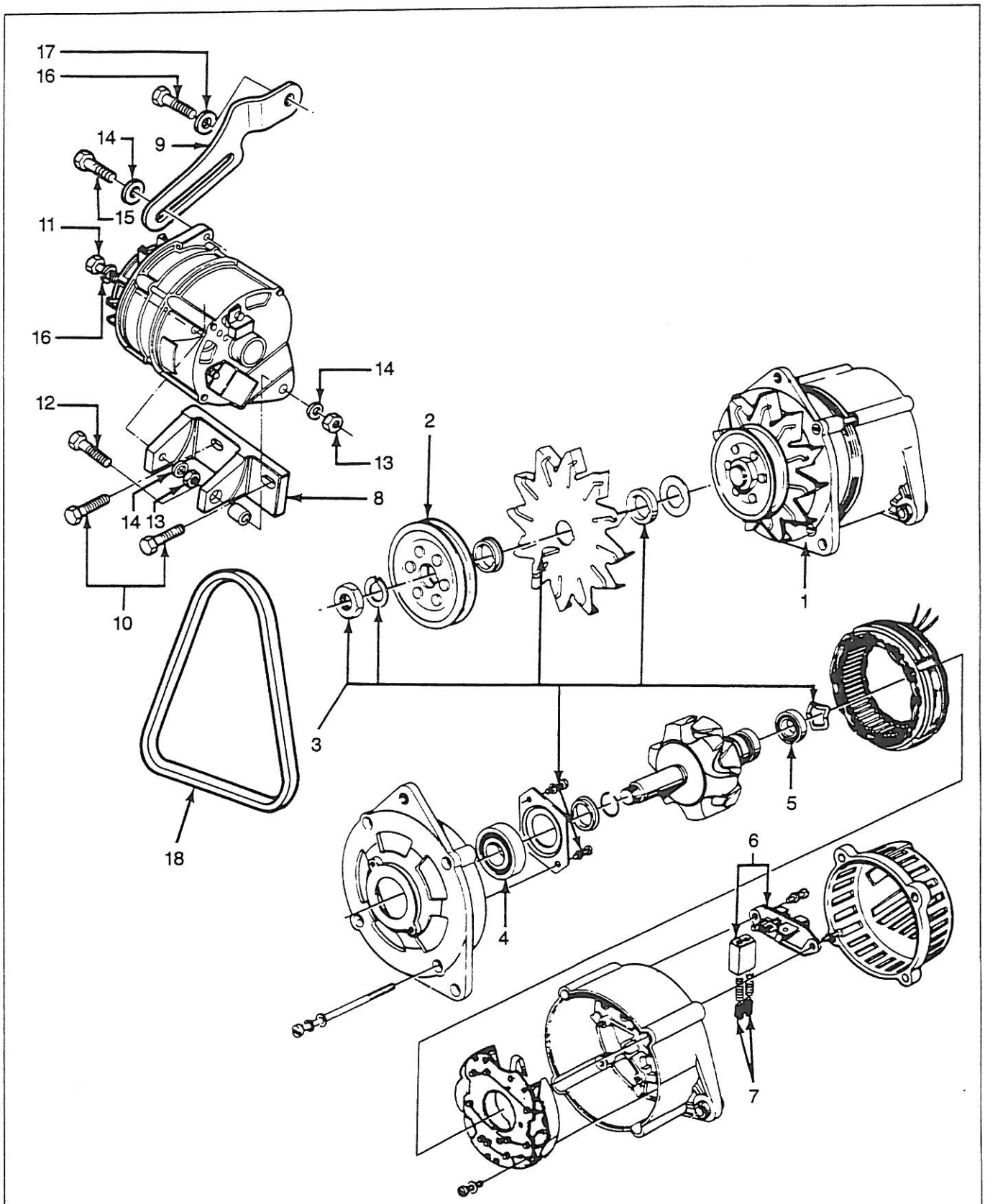

ALTERNATOR, REGULATOR AND RELATED PARTS — TYPICAL IE-490B

Ford Power Products

REF NO.	YEAR	PART NUMBER	DESCRIPTION	QUANTITY 67	QUANTITY 79
			ALTERNATOR, REGULATOR AND RELATED PARTS		
1	84/	86AB-10300-AB	Alternator - 55 AMP - 1 Groove Pulley	1	1
2	84/	D5RY-10344-A	Pulley	1	1
3	84/	D1RY-10B304-A	Kit - Pulley Installation	1	1
4	84/	71BB-10A303-AA	Bearing - Front	1	1
5	84/	D2RY-10A304-A	Bearing - Rear	1	1
6	84/89	D5RY-10316-B	▪Regulator Assembly - 84FB-KB Alternator	1	1
6	89/	86GB-10316-AA	★Regulator Assembly - 86AB-AB Alternator	1	1
7	84/	E7RY-10347-A	★Brush	2	2
8	84/	81AB-10039-CA	Bracket - Mounting	1	1
9	84/89	781F-10145-AA	▪Arm - Adjusting	1	1
	89/	89BF-10145-AB	★Arm - Adjusting	1	1
10	84/	E602208-S72	Bolt - M10 x 25 - Engine	2	2
	84/	E800152-S72	Bolt - M10 x 30 - Power Unit	2	2
11	84/	E600213-S101	Bolt - M8 x 40 - Alternator to Bracket	1	1
12	84/	E601215-S200	Bolt - M8 x 50 - Alternator to Bracket	1	1
13	84/	E620013-S72	Nut - M8	2	2
14	94/	E630028-S72	Washer - M8 Flat	3	3
15	84/	E602188-S72	Bolt - M8 x 25	1	1
16	84/	E602187-S72	Bolt - M8 x 20	1	1
17	84/	E630173-S71M	Washer - M8 Lock	1	1
18	84/	821F-6C301-AA	Belt - Water Pump and Alternator - 27/64 x 32-1/2 34	1	1
		C9PZ 8260-E	★Used on engines having a distributorless ignition system.		
			▪Used on engines having a breaker point or a solid state distributor ignition.		

SEE PAGE 25

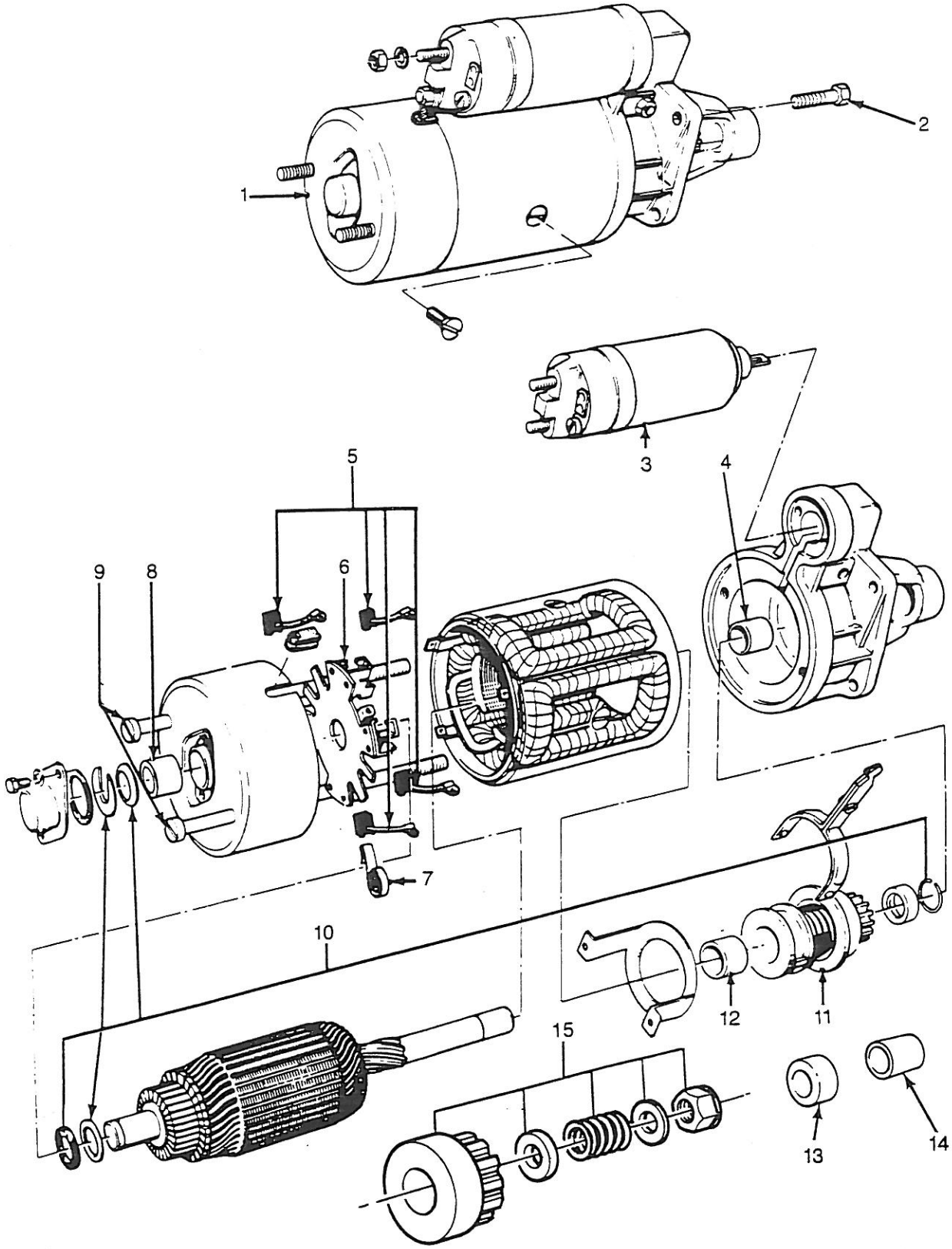

STARTER MOTOR AND RELATED PARTS — TYPICAL

IE-491A

Ford Power Products

STARTER MOTOR AND RELATED PARTS

REF NO.	YEAR	PART NUMBER	DESCRIPTION	QUANTITY 67	QUANTITY 79
1	84/	D8RZ-11002-A	*Starter Motor - Identification No. 1211227 or 1211512	1	1
	84/	E6JL-11001-AA	•Starter Motor Assembly	1	1
2	84/	N606067-S2	*Bolt - M10 x 75 - Housing to Starter	3	3
3	84/	73AB-11390-AA	*Solenoid	1	1
4	84/	D3RY-11135-A	*Bushing - Drive End Housing	1	1
5	84/	D8RZ-11057-A	*Brush Set - No. 1211227 Starter	1	1
	84/	EORZ-11057-A	*Brush Set - No. 1211512 Starter	1	1
6	84/	77BB-11061-AA	*Holder - Brush - No. 1211227 Starter	1	1
	84/	EORZ-11061-A	*Holder - Brush - No. 1211512 Starter (Not Replaced)	1	1
7	84/	D6RY-11059-A	*Spring - Brush - No. 1211227 Starter	4	4
8	84/	DORY-11135-B	*Bushing - Brush End - No. 1211227 Starter	1	1
	84/	EORZ-11135-A	*Bushing - Brush End - No. 1211512 Starter (Not Replaced)	1	1
9	84/	76EB-11K118-AA	*Bolt - Thru (Not Replaced)	2	2
10	84/	DORY-11K126-A	*Kit - Armature Installation - No. 1211227 Starter	1	1
11	84/	77FB-11350-BA	*Drive Assembly - No. 1211227 Starter	1	1
	84/	EORZ-11350-A	*Drive Assembly - No. 1211512 Starter	1	1
12	84/	DORY-11135-A	*Bushing - Starter Drive No. 1211227 Starter (Not Replaced)	1	1
13	84/	E7JL-12A120-AA	•Filter - Starter Drive	1	1
14	84/	E7JL-11K149-AA	•Shield - Starter Drive	1	1
15	84/	F2JL-11A108-AA	•Kit - Starter Drive	1	1

*Except Marine

•Marine

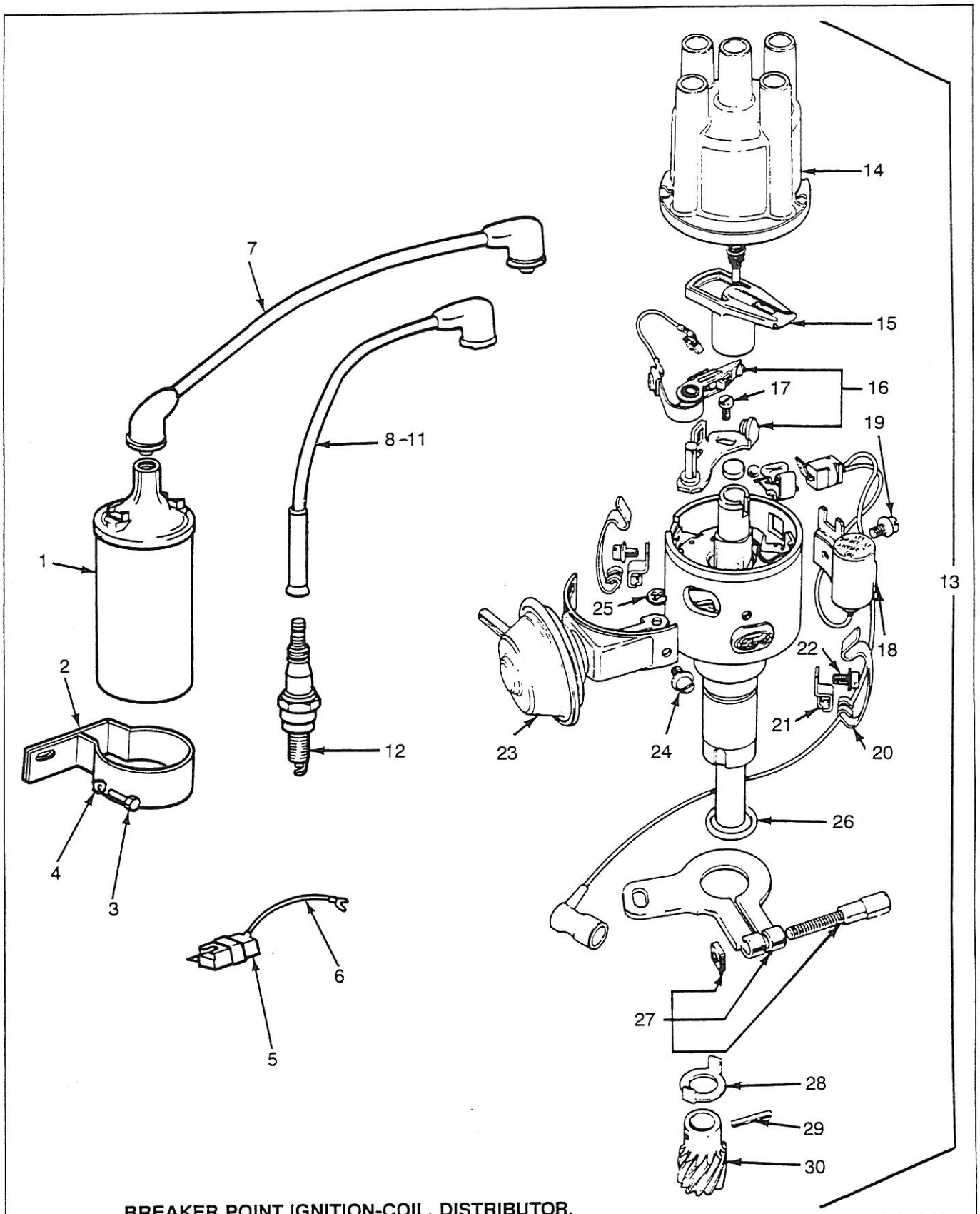

BREAKER POINT IGNITION-COIL, DISTRIBUTOR, SPARK PLUGS AND RELATED PARTS—TYPICAL

Ford Power Products

REF NO.	YEAR	PART NUMBER	DESCRIPTION	QUANTITY 67	QUANTITY 79
			IGNITION COIL, DISTRIBUTOR, SPARK PLUGS AND RELATED PARTS BREAKER POINT IGNITION		
1	84/86	B6A-12029-B	*Coil - Ignition	1	
2	84/86	B8S-12043-A	*Strap - Coil	1	
3	84/86	27185-S2	*Screw - 10-32 x 1.625	1	
4	84/86	34656-S36	*Nut - No. 10-32	1	
5	84/86	D9JL-12250-A	*Resistor Assembly - Ignition	1	
6	84/86	B7P-14497-A	*Wire - Resistor To Coil	1	
	84/86	B9A-14294-C	*Terminal - Eyelet/Crimp-on	1	
7	84/86	D4FZ-12298-A	*Wire - High Tension	1	
8	84/86	721F-12286-BA	*Wire Assembly - Spark Plug - No. 1	1	
9	84/86	721F-12283-BA	*Wire Assembly - Spark Plug - No. 2	1	
10	84/86	721F-12284-AA	*Wire Assembly - Spark Plug - No. 3	1	
11	84/86	721F-12287-AA	*Wire Assembly - Spark Plug - No. 4	1	
12	84/86	AGSF-22C	*Spark Plug	4	
13	84/86	84BF-12100-HA	*Distributor - Complete With Cap	1	
14	84/86	D1FZ-12106-A	*Cap - Distributor Housing	1	
15	84/86	D1FZ-12200-A	*Rotor	1	
16	84/86	77BF-12107-AA	*Points - Breaker	1	
17	84/86	71HM-12230-AA	*Screw (Not Replaced)	1	
18	84/86	831F-12300-AA	*Condenser	1	
19	84/86	71HM-12230-BA	*Screw (Not Replaced)	1	
20	84/86	71HM-12144-AA	*Clip - Cap Retainer (Not Replaced)	2	
21	84/86	71HM-12144-BA	*Retainer - Clip (Not Replaced)	2	
22	84/86	D1FZ-12230-C	*Screw	2	
23	84/86	84BF-12370-AA	*Diaphragm - Vacuum Advance	1	
24	84/86	71HM-12230-BA	*Screw (Not Replaced)	2	
25	84/86	E663205-S71	*Retainer (Not Replaced)	1	
26	84/86	D1RY-12143-A	*Seal - Distributor to Cylinder Block	1	
27	84/86	77BF-12273-AA	*Clamp Assembly	1	
28	84/86		*Washer (Not Serviced)	1	
29	84/86	67555-S	*Pin - 1/8 x 3/4	1	
30	84/86	DORY-12390-A	*Gear	1	

*Used on engines having a breaker point ignition system.

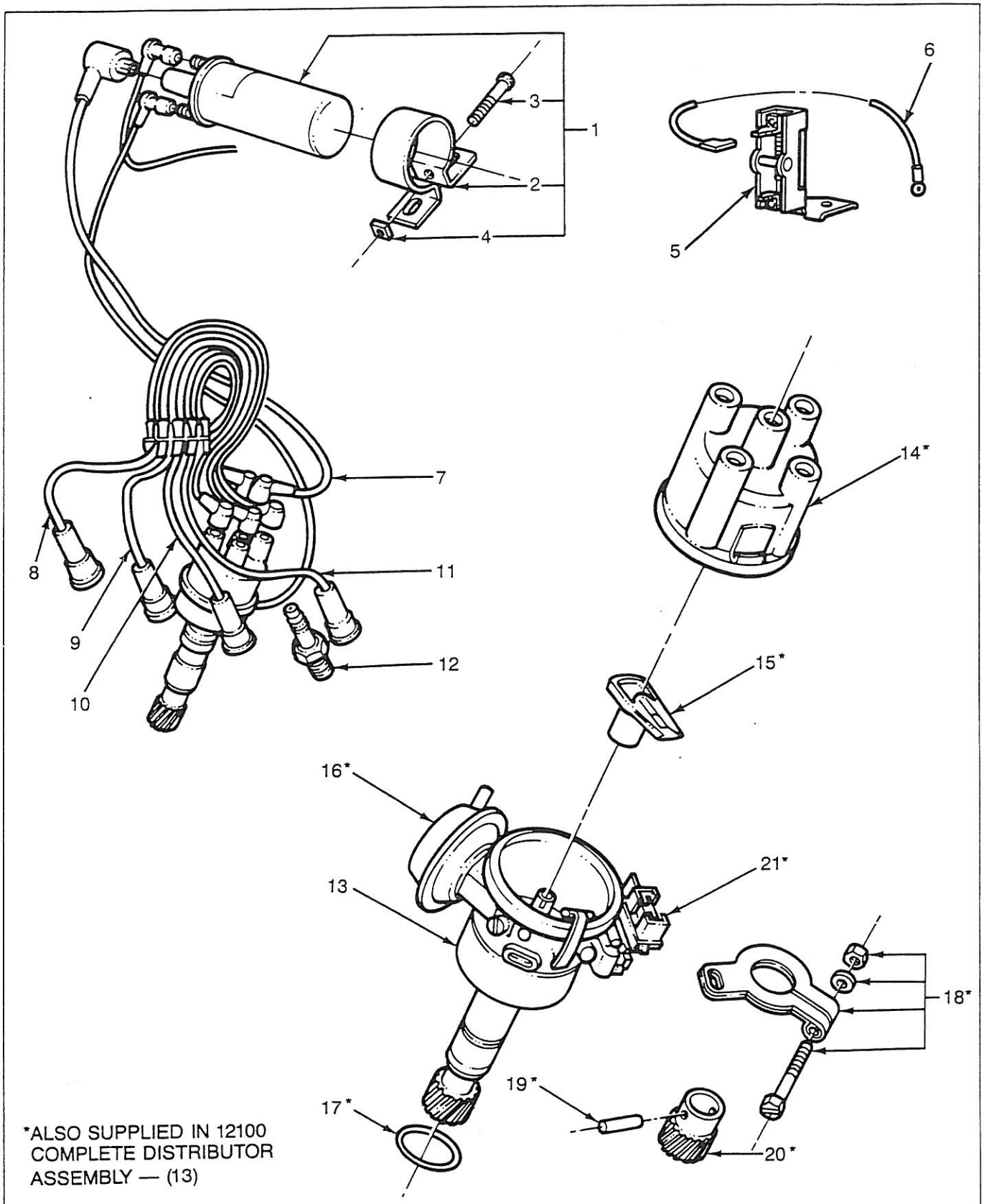

*ALSO SUPPLIED IN 12100 COMPLETE DISTRIBUTOR ASSEMBLY — (13)

SOLID STATE IGNITION - COIL, DISTRIBUTOR, SPARK PLUGS AND RELATED PARTS - TYPICAL

IE-500A

REF NO.	YEAR	PART NUMBER	DESCRIPTION	QUANTITY 67	QUANTITY 79
			IGNITION COIL, DISTRIBUTOR, SPARK PLUGS AND RELATED PARTS SOLID STATE IGNITION		
1	86/89	86FB-12024-AA	•Coil and Strap Assembly - Ignition	1	1
2	86/89	B8S-12043-A	•Strap - Coil	1	1
3	86/89	27185-S2	•Screw - 10-32 x 1.625	1	1
4	86/89	34656-S36	•Nut - No. 10-32	1	1
5	86/89	D9JL-12250-A	•Resistor Assembly - Ignition	1	1
6	86/89	B7P-14497-A	•Wire - Resistor To Coil	1	1
7	86/89	D4FZ-12298-A	•Wire - High Tension	1	1
8	86/89	87BF-12286-AB	•Wire Assembly - Spark Plug - No. 1	1	1
9	86/89	87BF-12283-AD	•Wire Assembly - Spark Plug - No. 2	1	1
10	86/89	87BF-12284-AB	•Wire Assembly - Spark Plug - No. 3	1	1
11	86/89	87BF-12287-AC	•Wire Assembly - Spark Plug - No. 4	1	1
12	86/89	AGSF-22C	•Spark Plug	4	4
13	86/89	86BF-12100-BA	•Distributor - Complete With Cap	1	
	86/89	86BF-12100-FA	•Distributor - Complete With Cap		1
14	86/89	D1FZ-12106-A	•Cap - Distributor Housing	1	1
15	86/89	88SX-12200-AA	•Rotor	1	1
16	86/89	86BF-12370-AA	•Diaphragm - Vacuum Advance	1	
	86/89	86BF-12370-EA	•Diaphragm - Vacuum Advance		1
17	86/89	D1RY-12143-A	•Seal - Distributor to Cylinder Block	1	1
18	86/89	77BF-12273-AA	•Clamp Assembly	1	1
19	86/89	67555-S	•Pin - 1/8 x 3/4	1	1
20	86/89	DORY-12390-A	•Gear	1	1
21	86/89	86BF-12K062-AA	•Module - Ignition	1	1
22	86/89	E6JL-12A200-CA	•Wiring Harness - Ignition - Not Illustrated	1	1
			•Used on engines having a solid state ignition system.		

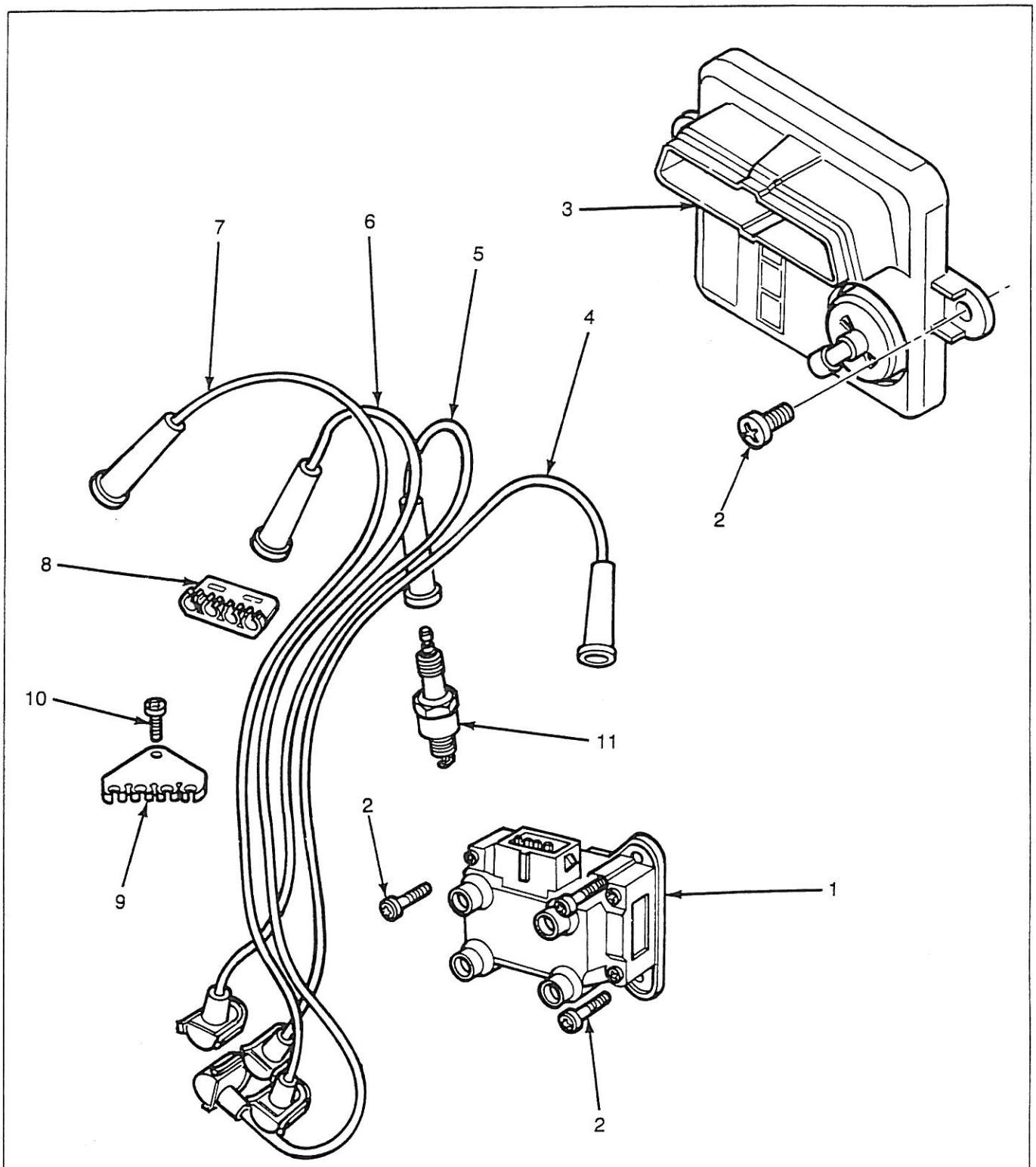

DISTRIBUTORLESS IGNITION — COIL, MODULE, SPARK PLUGS AND RELATED PARTS — TYPICAL

IE-525

REF NO.	YEAR	PART NUMBER	DESCRIPTION	QUANTITY 67	QUANTITY 79
			IGNITION COIL, MODULE, SPARK PLUGS AND RELATED PARTS DISTRIBUTORLESS IGNITION		
1	89/	89BF-12024-A1B	★Coil and Bracket Assembly - Ignition	1	1
2	89//	E804335-S201	★Screw - M8 x 14	3	3
3	89/	89FB-12A297-GA	★Control Assembly - Ignition	1	1
4	89/	89BF-12286-AD	★Wire Assembly - Spark Plug - No. 1	1	1
5	89/	89BF-12283-AD	★Wire Assembly - Spark Plug - No. 2	1	1
6	89/	89BF-12284-AD	★Wire Assembly - Spark Plug - No. 3	1	1
7	89/	89BF-12287-AC	★Wire Assembly - Spark Plug - No. 4	1	1
8	89/	E865648-S	★Separator - Ignition Wire	1	1
9	89/	89BF-12297-AA	★Separator - Ignition Wire	1	1
10	89/	E802166-S76	★Screw - M4 x 10	1	1
11	89/	87YF-12405-AB	★Spark Plug	4	4
12	89/	E8JL-12A200-AD	★Harness Assembly - Main Wiring - Less Voltmeter - Not Illustrated	1	1

★Used on engines having a distributorless ignition system.

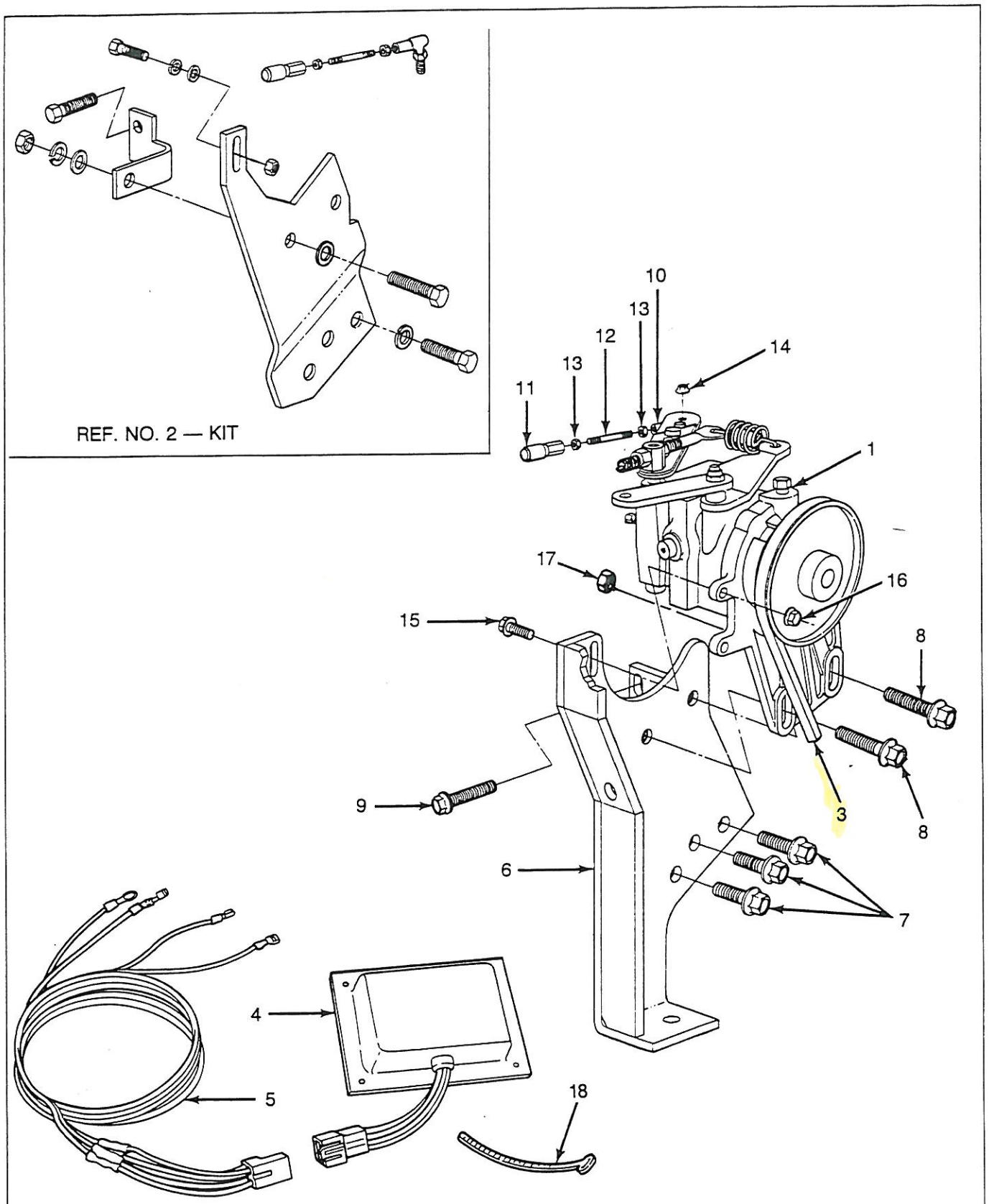

MECHANICAL GOVERNOR, SPEED LIMITING SWITCH AND RELATED PARTS — TYPICAL IE-493C

VSG 411-413
67-79 CID
GASOLINE ENGINE AND POWER UNIT

Ford Power Products

REF NO.	YEAR	PART NUMBER	DESCRIPTION	QUANTITY 67	QUANTITY 79
			MECHANICAL GOVERNOR, SPEED LIMITING SWITCH AND RELATED PARTS		
1	84/	E5JL-12450-AB	Governor - Variable Speed	1	1
	84/	E5JL-12450-CB	Governor - Constant Speed - 1800 RPM	1	1
	84/	E5JL-12450-DA	Governor - Constant Speed - 3600 RPM	1	1
2	84/89	E6JL-12448-AA	■Mounting Kit - Governor - Engine	1	1
			CONSISTS OF:		
			Bracket	1	1
			Support - Bracket	1	1
			Bolt - M10 x 22	3	3
			Bolt - M10 x 35	2	2
			Bolt - M10 x 30	1	1
			Nut - M10	2	2
			Washer - B10 Lock	5	5
			Washer - No. 10 Lock	1	1
			Washer - 3/8 Flat	3	3
			Ball Joint - No. 10-32	1	1
			Ball Joint - Metric	1	1
			Throttle Rod	1	1
			Nut - No. 10-32	3	3
			Screw - 1/4-20 x 1.00	1	1
			Washer - 1/4 Flat	1	1
			Washer - 1/4 Lock	1	1
			Nut - 1/4-20	1	1
3	84/89	E5JL-8620-AA	■Belt - Governor - 1800 RPM - 39.37 x 41.54	1	
	86/89	E6JL-8620-AA	●Belt - Governor - Variable and 3600 RPM - 39.37 x 44.00		1
	84/89	E6JL-8620-BA	■Belt - Governor - 1.1 Variable and 3600 RPM - 1.3 1800 RPM - 39.37 x 43.00	1	1
	89/	E9JL-8620-AA	★Belt - Governor - Variable Speed and 3600 RPM - 39.37 x 44.68	1	1
	89/	E9JL-8620-BA	★Belt - Governor - 1800 RPM - 39.37 x 43.78	1	1
4	84/	E4JL-9D744-AB	Switch - Speed Limiting	1	1
5	84/	E4JL-14487-AA	Harness - Wiring - Patch - Speed Limiting Switch	1	1
6	85/89	E6JL-12454-AA	■Bracket - Governor Mounting - Power Unit	1	1
	89/	E9JL-12454-AB	★Bracket - Governor Mounting - Power Unit	1	1
	89/	E9JL-12454-BA	★Bracket - Governor Mounting - Engine	1	1
7	84/	N800057-S2	Bolt - M10 x 40 UBS	3	3
8	84/86	56540-S2	*Bolt - 3/8-16 x 1.00	2	
	86/	N605920-S2	Bolt - M10 x 33	2	2
9	84/86	N605788-S2	*Bolt - M8 x 30 UBS	1	
10	84/	E5JL-99810-BA	Ball Joint	1	1
11	84/89	E5JL-99810-AA	■Ball Joint	1	1
	89/	E7JL-99810-AA	★Ball Joint	1	1
12	84/89	E5JL-9A722-AA	■Throttle Rod	1	1
	89/	E8JL-9A722-AB	★Throttle Rod	1	1
13	84/	34079-S36	Nut - No. 10-32	2	2
14	84/	55732-S2	Nut - No. 10-32 Hex Flange	1	1
15	84/86	56706-S2	*Bolt - 1/4-20 x 1.25 (Not Replaced)	1	
	86/	N606677-S55	Screw and Washer - M6 x 25	1	1
16	84/86	33769-S2	*Nut - 1/4-20 Lock	1	
	86/	N620480-S2	Nut - M6	1	1
17	86/89	N800152-S2	●Nut - M10	2	2
18	84/	351053-S100	Strap - Harness Retaining	1	1

*Used on engines having a breaker point ignition system.

●Used on engines having a solid state ignition system.

★Used on engines having a distributorless ignition system.

■Used on engines having a breaker point or a solid state distributor ignition.

WIRED 63807-0 -7a

NAPA# 25-7425 OR 25-7430

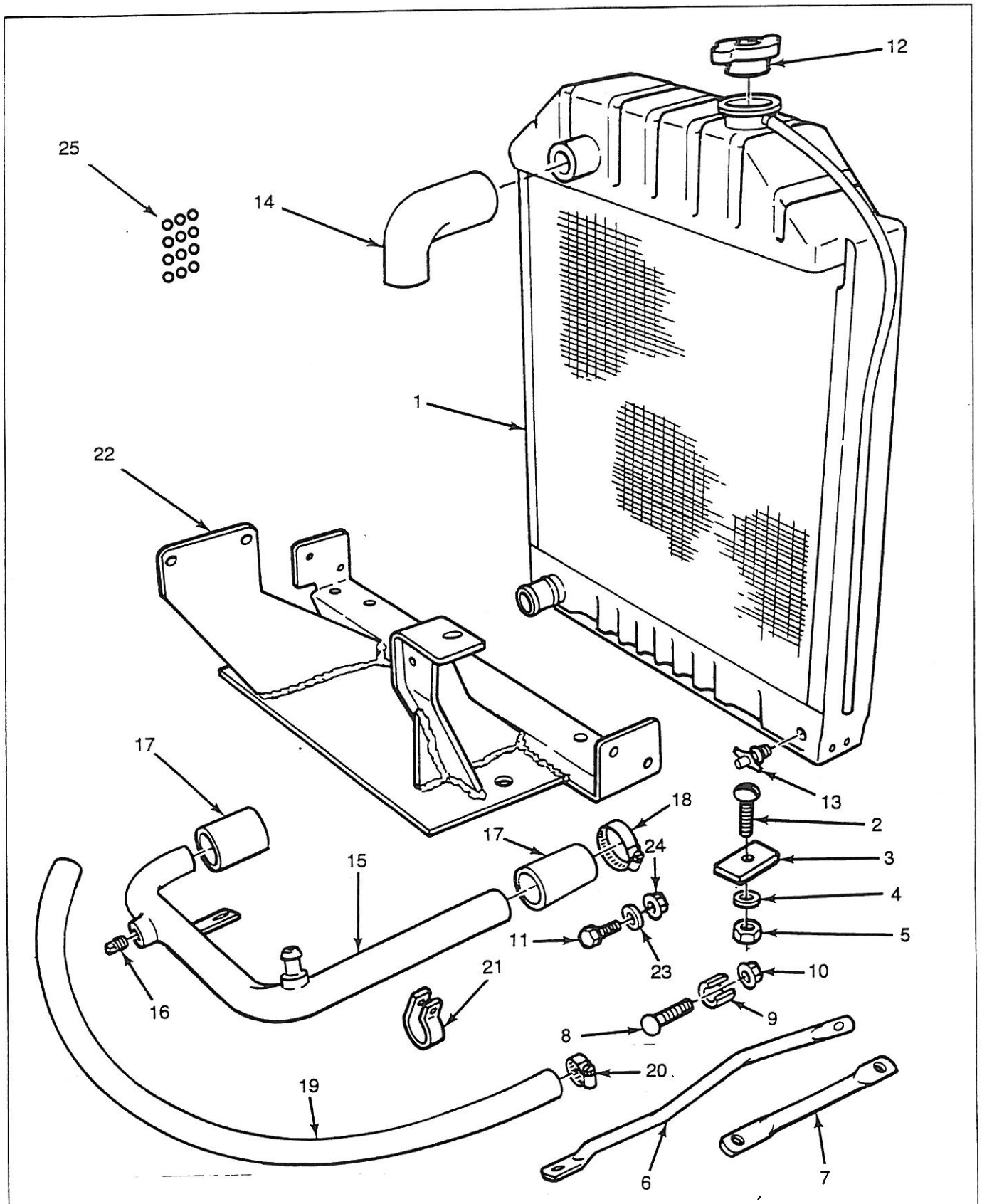

RADIATOR, FRONT SUPPORT AND RELATED PARTS — TYPICAL

IE-498B

Ford Power Products

RADIATOR FRONT SUPPORT AND RELATED PARTS

REF NO.	YEAR	PART NUMBER	DESCRIPTION	QUANTITY 67	QUANTITY 79
1	85/	E9JL-8005-AA	Radiator Assembly	1	1
2	85/	383465-S101	Bolt - 7/16-14 x 1.25 Carriage - Radiator to Front Support	2	2
3	85/	7C-8125-A	Insulator - Radiator to Front Support	2	2
4	85/	382873-S100	Washer - 7/16 Flat	2	2
5	85/	382400-S2	Nut - 7/16-14	2	2
6	85/89	E5JL-8046-AA	▪Brace - Radiator - Left	1	1
	89/	E9JL-8046-BA	★Brace - Radiator - Left	1	1
7	85/89	D9JL-8K651-A	▪Brace - Radiator - Right	1	1
	89/	E9JL-8046-AA	★Brace - Radiator - Right	1	1
8	85/	58811-S2	Bolt - 5/16-18 x 1.5 Carriage - Brace to Radiator	2	2
9	85/89	D9JL-10A370-B	▪Spacer - Brace to Radiator - .46 I.D. x .88 O.D. x .87 Long	2	2
	89/	E9JL-10A370-AA	★Spacer - Brace to Radiator - .50 I.D. x .88 O.D. x .56 Long	2	2
10	85/	33770-S2	Nut - 5/16-18 - Brace to Radiator	2	2
11	85/86	56538-S2	*Bolt - 3/8-16 x .75	1	
	86/89	N605905-S2	●Bolt - M8 x 20	1	1
	89/	56520-S2	★Bolt - 5/16-18 x .75 - Right Radiator Brace to Governor Bracket	1	1
12	85/	E2NN-8100-AA	Cap - Radiator - 7 PSI	1	1
13	85/	8A-8115	Drain Cock	1	1
14	85/	E5JL-8260-AA	Hose - Upper Radiator	1	1
15	85/89	E5JL-8274-AB	▪Tube - Radiator to Water Pump	1	1
	89/	E8JL-8A521-BA	★Tube - Radiator to Water Pump	1	1
16	85/89	87838-S2	▪Plug - 3/8-18 Pipe	1	1
17	85/89	381243-S030A	▪Hose - 1.25 x 3.0 - Coolant	2	2
	89/	E8JL-8286-AA	★Hose - Water Pump Inlet	1	1
	89/	E9JL-8286-AA	★Hose - Radiator Lower	1	1
18	85/	B7AZ-8287-C	Clamp - Hose - 1.75	5	5
	85/	D9AZ-8287-F	Clamp - Hose - 2.25	1	1
19	85/89	381260-S370A	▪Hose - By-Pass	1	1
	89/	E9JL-8548-CA	★Hose - By-Pass	1	1
20	85/	383522-S	Clamp - Hose - 1.12	2	2
21	85/89	374944-S100	▪Clip - By-Pass Hose to Rear Housing	1	1
22	85/	E8JL-5019-BA	Support - Front Engine and Radiator	1	1
23	86/89	E630027-S101	●Washer - M8 Flat	1	1
24	86/89	N620481-S2	●Nut - M8 UBS	1	1
25	85/	D9AZ-19558-A	Pellets - Cooling System Anti-Leak	AR	AR

*Used on engines having a breaker point ignition system.

●Used on engines having a solid state ignition system.

★Used on engines having a distributorless ignition system.

▪Used on engines having a breaker point or a solid state distributor ignition.

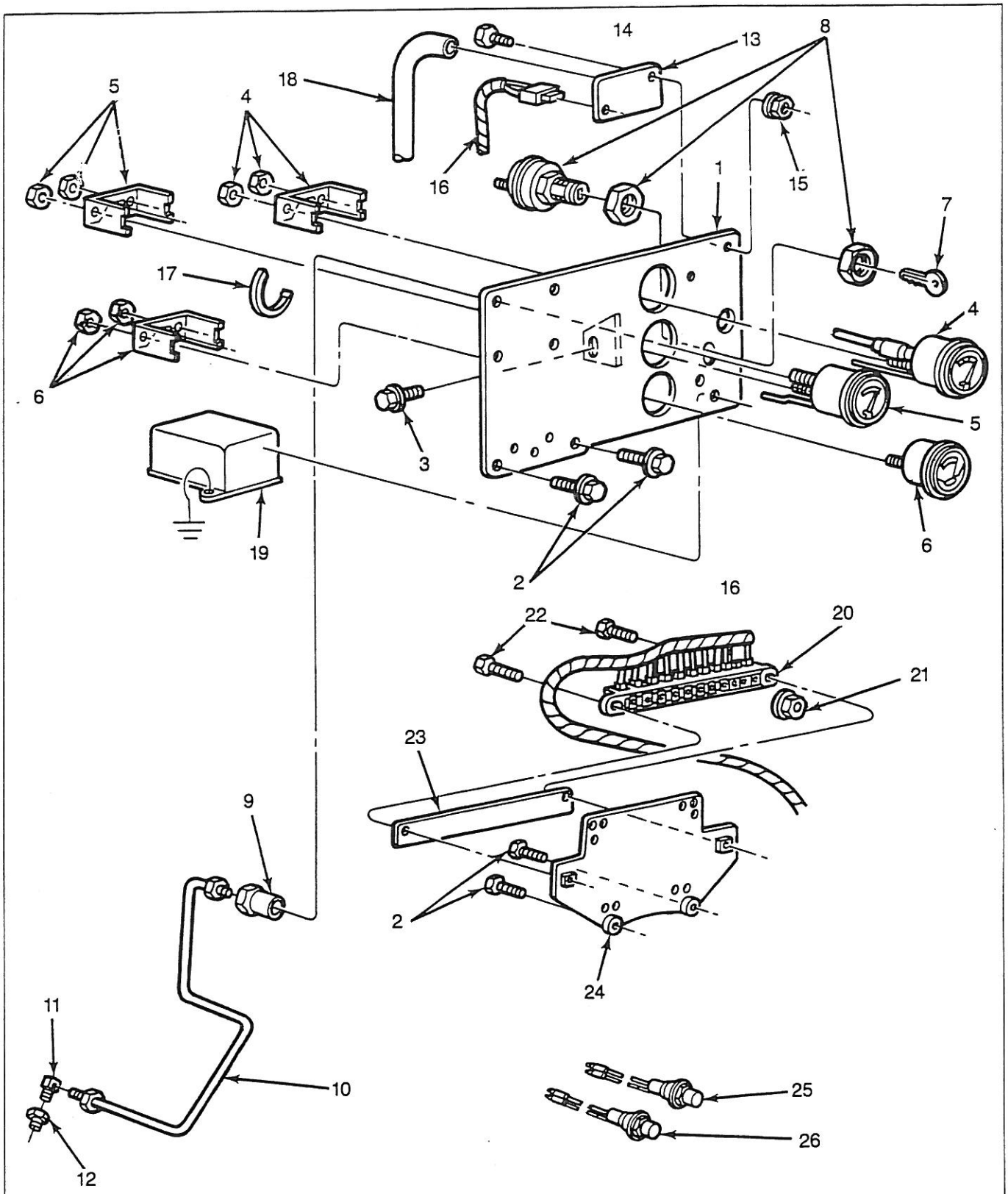

INSTRUMENTS AND WIRE HARNESS — TYPICAL

IE-560

Ford Power Products

REF NO.	YEAR	PART NUMBER	DESCRIPTION	QUANTITY 67	QUANTITY 79
			INSTRUMENTS AND WIRE HARNESS		
1	85/89	E6JL-16965-AA	▪Panel - Instrument - 3 Gauges	1	1
	85/89	E6JL-16965-BA	▪Panel - Instrument - 1 Gauge - 2 Lights	1	1
	89/	E9JL-16965-AA	★Panel - Instrument - 3 Gauges	1	1
2	85/	N800057-S2	Bolt - M10 x 40 UBS	2	2
3	89/	N605788-S2	★Bolt - M8 x 30 UBS	1	1
4	85/89	D8JL-10883-D	▪Gauge Assembly - Water Temperature - 1 Gauge - 2 Lights	1	1
	85/	E5JL-10883-CA	Gauge and Safety Switch - Water Temperature - 3 Gauge System	1	1
5	85/	D3JL-9G272-B	Gauge and Safety Switch - Oil Pressure - 3 Gauge System	1	1
6	85/	D8JL-10797-A	Voltmeter	1	1
7	85/	E1JL-11603-AA	Key - Ignition	1	1
8	85/	D9JL-11572-A	Switch Assembly - Ignition and Start	1	1
9	85/	87987-S	Adapter - Oil Pressure Gauge	1	1
10	85/	D9JL-18676-B	Tube - Oil Pressure Gauge	1	1
11	85/	87379-S	Elbow 90 Deg. 1/8 Tube To 1/8	1	1
12	85/	353107-S101	Bushing - Reducer - 1/4 To 1/8	1	1
13	89/	89FB-12A297-GA	★Control Assembly - Ignition	1	1
14	89/	E602167-S71	★Bolt - M6 x 20	2	2
15	89/	N621906-S36	★Nut and Washer Assembly - M6	2	2
16	85/89	E6JL-14305-EA	▪Harness Assembly - Main Wiring - 1 Gauge - 2 Lights	1	1
	85/89	E6JL-14305-FA	▪Harness Assembly - Main Wiring - 3 Gauges	1	1
	89/	E8JL-12A200-AD	★Harness Assembly - Main Wiring - Less Voltmeter - Not Illustrated	1	1
	89/	E9JL-14305-AB	★Harness Assembly - Main Wiring - 3 Gauge - With Voltmeter	1	1
	85/	E9JL-14305-BB	Harness Assembly - With Terminal Block	1	1
17	85/	351053-S100	Strap - Harness Retaining	1	1
18	89/	381335-S140A	★Hose - Vacuum 5/32 I.D. x 14.0 - Less Terminal Block	1	1
	85/	381335-S360Y	Hose - Vacuum 5/32 I.D. x 36.0" - With Terminal Block	1	1
19	85/	E9JL-11451-AA	Switch - Magnetic Safety	1	1
20	85/	DOHZ-14448-F	Block Assembly - 11 Stud Terminal	11	11
21	85/	383255-S36	Nut And Washer - /10-24	2	2
22	85/	56503-S2	Bolt - 1/4-20 x .75	1	1
23	85/	E6JL-14F448-AA	Plate - Terminal Block	1	1
24	85/	E6JL-14A465-BA	Bracket - Terminal Block	1	1
25	85/89	EOJL-14522-BA	▪Light Assembly - Low Oil Pressure Warning	1	1
26	85/89	EOJL-14522-AA	▪Light Assembly - Alternator Warning	1	1

★Used on engines having a distributorless ignition system.

▪Used on engines having a breaker point or a solid state distributor ignition.

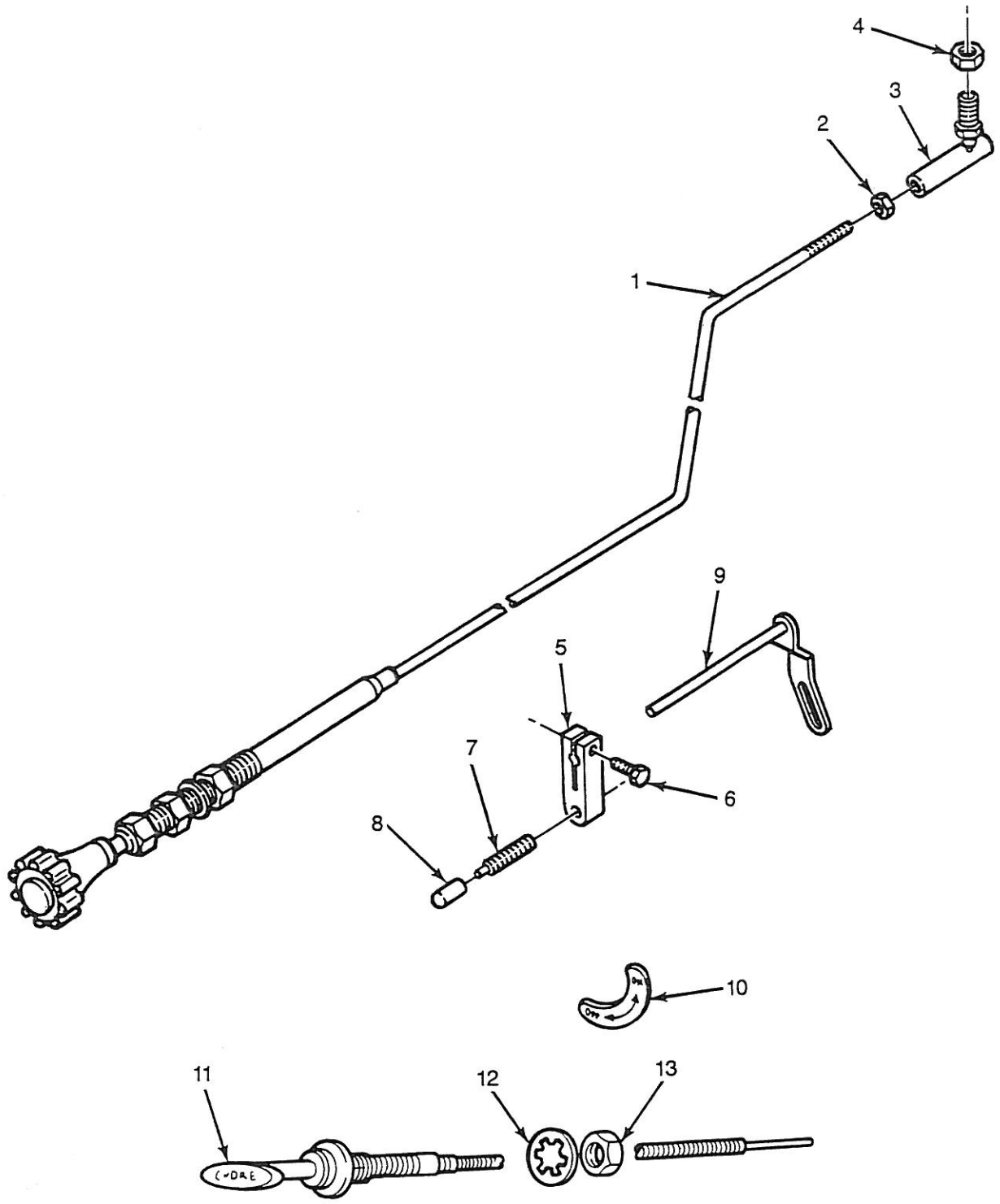

THROTTLE AND CHOKE CONTROLS — TYPICAL

IE-559

THROTTLE AND CHOKE CONTROLS

REF NO.	YEAR	PART NUMBER	DESCRIPTION	QUANTITY 67	QUANTITY 79
1	85/	E6JL-9775-AA	Control Assembly - Throttle	1	1
2	85/	34079-S36	Nut - No. 10-32	1	1
3	85/	C6JZ-99810-B	Ball Joint - Throttle Control to Governor	1	1
4	85/	33696-S7	Nut - 1/4-28 - Ball Joint to Governor	1	1
5	85/89	E5JL-9548-AA	▪Lever - Choke Control	1	1
6	85/89	54652-S36	▪Screw - No. 10-24 x .50	1	1
7	85/89	E5JL-9587-AA	▪Plunger - Choke Lever	1	1
8	85/89	382443-S	▪Cap - Rubber	1	1
9	85/89	E6JL-9D541-AA	▪Rod - Choke Control	1	1
10	85/89	E5JL-9545-AA	▪Decal - Choke Control	1	1
11	89/	C1JZ-9700-A	★Cable Assembly - Choke Control	1	1
12	89/	34910-S8	★Washer - 9/16 Internal Lock	1	1
13	89/	33848-S8	★Nut - 9/16-18	1	1

★Used on engines having a distributorless ignition system.

▪Used on engines having a breaker point or a solid state distributor ignition.

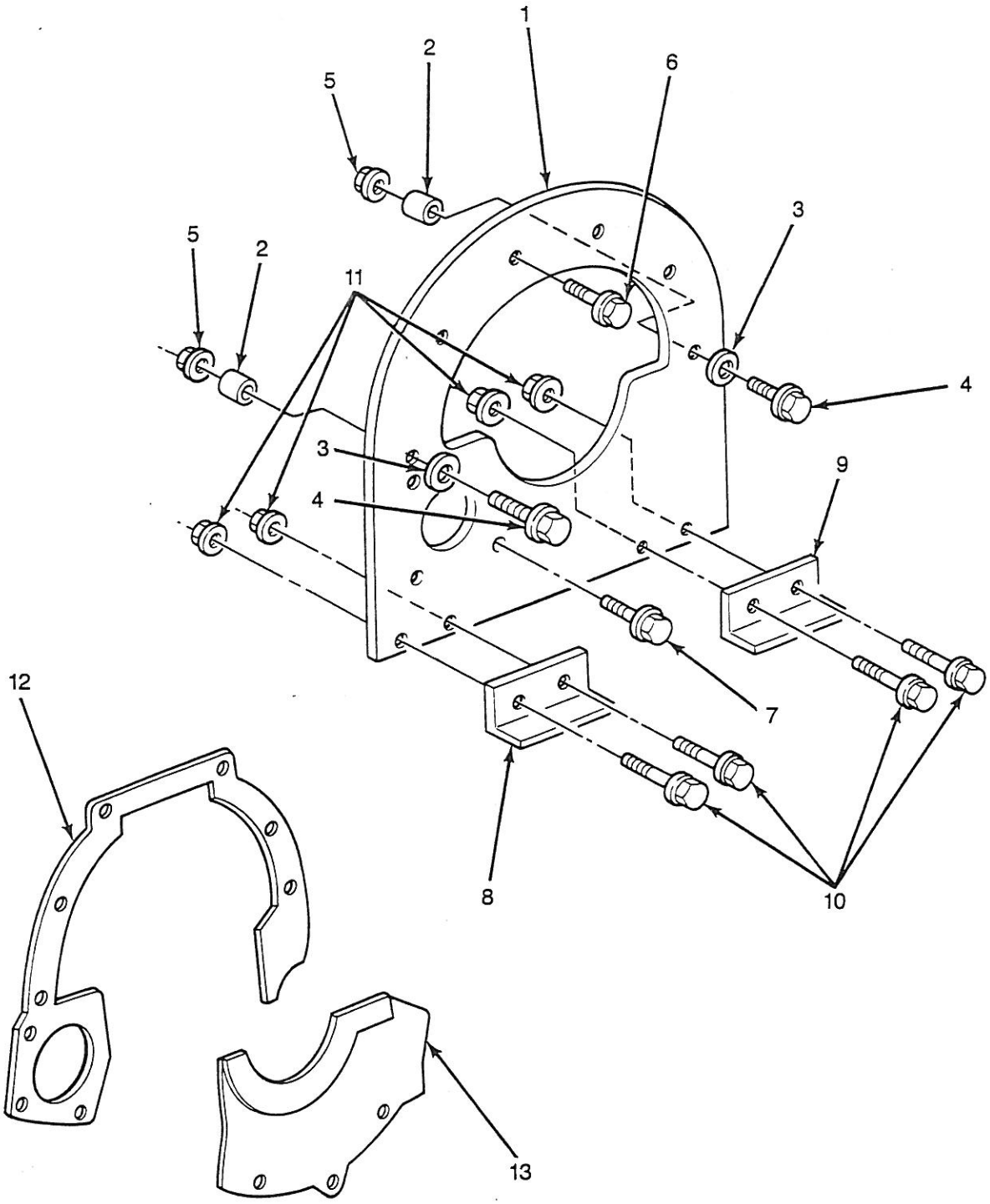

SUPPORT — REAR ENGINE SUPPORT AND RELATED PARTS — TYPICAL

IE-526A

REF NO.	YEAR	PART NUMBER	DESCRIPTION	QUANTITY 67	QUANTITY 79
			SUPPORT - REAR ENGINE AND RELATED PARTS		
1	86/	E6JL-6070-AC	Support - Rear Engine	1	1
2	86/	70HM-6397-AA	Dowel	2	2
3	86/	44879-S2	Washer - 1/2 Flat - Hardened	2	2
4	86/	E800003-S72	Bolt - M10 x 45 UBS	4	4
5	86/	N800152-S2	Nut - M10	4	4
6	86/	N605799-S2	Bolt - M10 x 20	2	2
7	86/88	N801681-S100	•Bolt - M10 x 25 UBS	5	5
8	86/	E6JL-6K015-AA	Foot - Engine Mounting - Left	1	1
9	86/	E6JL-6K015-BA	Foot - Engine Mounting - Right	1	1
10	86/	N605787-S52	Bolt - M8 x 25	4	4
11	86/	N800406-S2	Nut - M8	4	4
12	86/	771M-6A373-AA	Plate - Rear Engine Upper	1	1
13	86/	E5JL-6366-AA	Plate - Rear Engine - Lower	1	1

•Used on engines having a solid state ignition system.