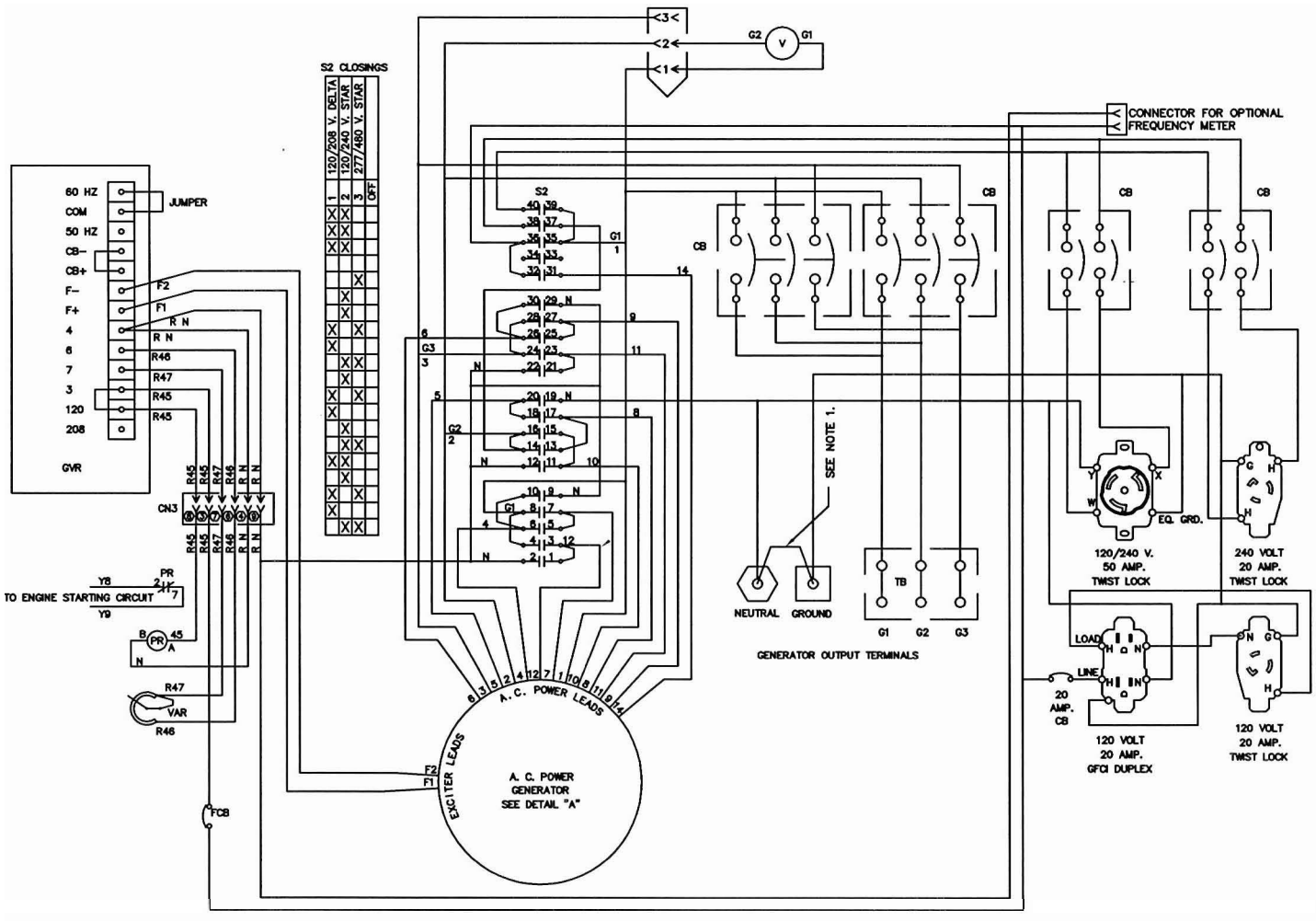

LEGEND

CB	CIRCUIT BREAKER
CN3	WIRING HARNESS CONNECTOR
FCB	FIELD CIRCUIT BREAKER
G	EQUIPMENT GROUND
G1, G2, & G3	GENERATOR POWER LEAD IDENTIFICATION
GVR	GENERATOR VOLTAGE REGULATOR
H	RECEPTACLE POWER TERMINAL
N	GENERATOR NEUTRAL IDENTIFICATION
PR	START SIGNAL DISCONNECT RELAY
S2	VOLTAGE CONFIGURATION SELECTOR SWITCH
TB	TERMINAL BLOCK
V	VOLTMETER
VAR	VOLTAGE ADJUSTMENT RHEOSTAT
W	GENERATOR POWER LEAD IDENIFICATION
X	GENERATOR POWER LEAD IDENIFICATION
Y	GENERATOR POWER LEAD IDENIFICATION

NOTES:
1. REMOVE JUMPER FOR ISOLATED NEUTRAL APPLICATIONS.

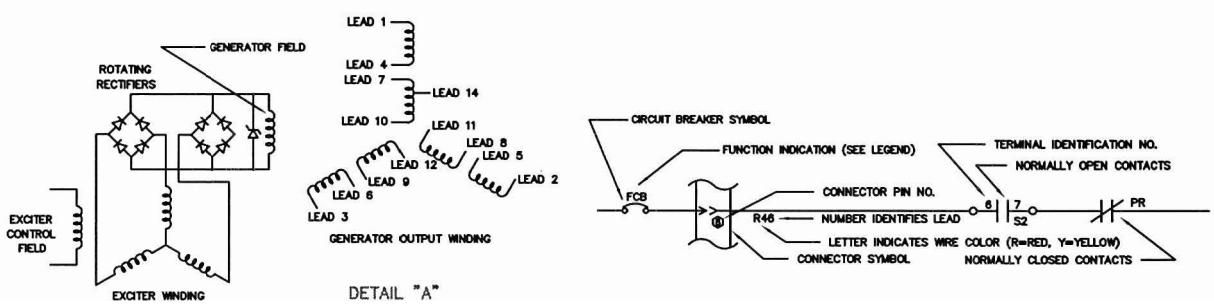

98983-001