ADVANCE POWER

PORTABLE GENERATORS

INSTALLATION, OPERATION, and MAINTENANCE INSTRUCTIONS

MODELS AP3000
AP4500
AP5000H

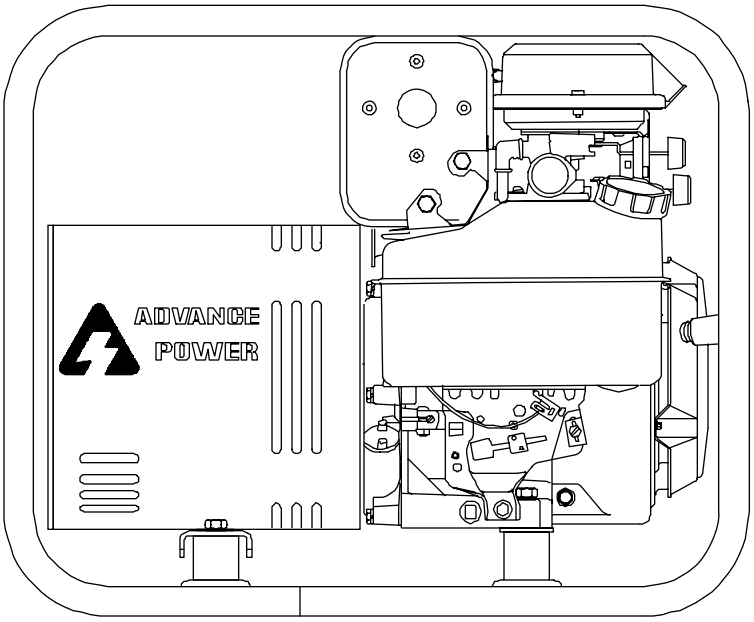

MODEL AP3000

SAFETY FIRST

READ THIS MANUAL BEFORE OPERATING YOUR GENERATOR

Read and understand all instructions in the manual before starting and operating the generator set.

USING THIS MANUAL

Congratulations on your choice of an **ADVANCE POWER** generator set. You have selected a high-quality, precision-engineered generator set designed and tested to give you years of satisfactory portable service.

To get the best performance from your new engine generator set, it is important that you carefully read and follow the operating instructions in this manual.

Should you experience a problem please follow the "Things To Check" near the end of this manual. The warranty listed in this manual describes what you can expect from the manufacturer should you need service assistance in the future.

PROPER USE AND INSTALLATION

You must be sure your new engine generator set is:

* Properly serviced before starting
* Operated in a well ventilated area
* Operated so that exhaust gases are dispersed safely
* Wired by a qualified electrician
* Operated only for its designed purposes
* Used only by operators who understand its operation
* Properly maintained

COPY YOUR MODEL AND SERIAL NUMBER HERE

No other **ADVANCE POWER** generator has the same serial number as yours. It is important that you record the number and other vital information here. If you should ever need to contact us on this unit it will help us to respond to your needs faster.

MODEL_____

SERIAL NUMBER_____

PURCHASE DATE_____

DEALER_____

TABLE OF CONTENTS

INTRODUCTION	i
SPECIFICATIONS BY MODEL	1
GUIDE TO PRODUCT SAFETY	2
BASIC INFORMATION	3
Intended Uses	3
Restricted Uses	3
Unit Capabilities	3
PREPARING THE UNIT	4
Unpacking the unit	4
Unit Preparation	4
BASIC OPERATION	5
Low Oil Level Shutdown System	5
Initial Starting	5
Starting	5
Starting Hints	5
Stopping And Storage	6
Operating Speed	6
Connecting The Loads	6
OPERATOR CARE AND MAINTENANCE	7
Engine Care	7
Generator Care	8
Cleaning	8
Troubleshooting - Things To Check BEFORE You Call For Service	8
Schematic Wiring Diagram	9
12 MONTH WARRANTY	10

SPECIFICATIONS BY MODEL

FEATURE	AP3000	AP45000	AP5000H
GENERATOR			
Maximum Watts	3000	4500	5000
Continuous Watts	2500	4000	5000
AC Voltage	120 Volt	120/240 Volt	120/240 Volt
AC Amperes	20.8 Amps	33.3/16.7Amps	37.5/18.75 Amps
RECEPTACLES & CIRCUIT BREAKERS			
NEMA 5-15 (120V)	2	2	N/A
NEMA 5-15 GFCI (120V)	N/A	N/A	2
NEMA L5-20 Twistlock (120V)	N/A	N/A	1
NEMA 6-15 (240V)	N/A	2	N/A
NEMA L6-20 Twistlock (240V)	N/A	N/A	1
Circuit Breaker Amperage	20	15	20
ENGINE			
Size	5 HP	8 HP	9 HP
Model	Briggs & Stratton 135232	Briggs & Stratton 197412	Honda GX270
Type	----------	See Engine for Type	----------
Fuel Capacity (unleaded)	3 Qt	4.5 Gal	4.5 Gal
Oil Capacity	1.25 pints	2.75 pints	2.4 pints
	(see engine manual for type and grade of oil)		
Starting System	Recoil	Recoil	Recoil
Stop System	Lever on Engine	Switch on Engine	Switch on Engine
Low Oil Shutdown	Not Available	Standard	Standard

GUIDE TO PRODUCT SAFETY

This engine generator set has been designed and manufactured to allow safe, reliable performance. Poor maintenance, improper or careless use can result in potential deadly hazards; from electrical shock, exhaust gas asphyxiation, or fire. Please read all safety instructions carefully before installation or use. Keep these instructions handy for future reference. Take special note and follow all warnings on the unit labels and in the manuals.

ANSI SAFETY DEFINITIONS

DANGER:
DANGER indicates an imminently hazardous situation which, if not avoided, will result in death or serious injury. This signal word is to be limited to the most extreme situations.

WARNING:
WARNING indicates a potentially hazardous situation which, if not avoided, could result in death or serious injury.

CAUTION:
CAUTION indicates a potentially hazardous situation which, if not avoided, may result in minor or moderate injury. It may also be used to alert against unsafe practices.

NOTE:
CAUTION is also used on the unit labels and in this manual to indicate a situation that could result in serious damage or destruction of the equipment and possible personal injury.

1. **ELECTRIC SHOCK-** The output voltage present in this equipment can cause a fatal electric shock. This equipment must be operated by a responsible person.

   a. Do not allow anyone to operate the generator without proper instruction.
   b. Guard against electric shock.
   c. Avoid contact with live terminals or receptacles.
   d. Use extreme care if operating this unit in rain or snow.
   e. Use only three-prong grounded plugs and extension cords.
   f. Be sure the unit is properly grounded to an external ground rod driven into the earth.

2. **FIRE HAZARD**- Gasoline and other fuels always present a hazard of possible explosion and/or fire.

   a. Do not refuel when the engine is running or hot. Allow the engine to cool at least two minutes before refueling.
   b. Keep fuel containers out of reach of children.
   c. Do not smoke or use open flame near the generator set or fuel tank.
   d. Keep a fire extinguisher nearby and know its proper use. Fire extinguishers rated ABC by NFPA are appropriate.
   e. Store fuel only in an approved container, and only in a well-ventilated area.

3. **DEADLY EXHAUST GAS** - Exhaust fumes from any gasoline engine contain carbon monoxide, an invisible, odorless and deadly gas that must be mixed with fresh air.

   a. Operate only in well ventilated areas.
   b. Never operate indoors.
   c. Never operate the unit in such a way as to allow exhaust gases to seep back into closed rooms (i.e. through windows, walls or floors).

4. **NOISE HAZARD** - Excessive noise is not only tiring, but continual exposure can lead to loss of hearing.

   a. Use hearing protection equipment when working around this equipment for long periods of time.
   b. Keep your neighbors in mind when permanently installing this equipment.

5. **CLEANLINESS**- Keep the generator and surrounding area clean.

   a. Remove all grease, ice, snow or materials that create slippery conditions around the unit.
   b. Remove any rags or other material that could create potential fire hazards.
   c. Carefully wipe up any gas or oil spills before starting the unit.
   d. Never allow leaves or other flammable material to build up around the engine exhaust area.

6. **SERVICING EQUIPMENT**- All service, including the installation or replacement of service parts, should be performed only by a qualified technician.

   a. Use only factory approved repair parts.
   b. Do not work on this equipment when fatigued.
   c. Never remove the protective guards, cover, or receptacle panels while the engine is running.
   d. Use extreme caution when working on electrical components. High output voltages from this equipment can cause serious injury or death.
   e. Always avoid hot mufflers, exhaust manifolds, and engine parts. They all can cause severe burns instantly.
   f. Installing a home-standby generator is not a “do-it-yourself” project. Consult a qualified, licensed electrician or contractor. The installation must comply with all national, state, and local codes.

INTENDED USES

These engine generator sets have been designed primarily for portable use. 120 and/or 240 volt AC receptacles are provided in the 'control panel' to plug in your loads (lights, portable tools, and small appliances). Units larger than 4000 watts are dual wound generators, therefore the 120 Volt loads must be equally split with 1/2 of the rated capacity available on each of the two 120 Volt circuits. See unit capabilities for further explanation.

These portable units require large quantities of fresh air for cooling of both the engine and the generator. Fresh air is drawn from both the engine end and the generator end and is exhausted at the center of the unit. For safety, long life and adequate performance, these units should never be run in small compartments without positive fresh air flow.

RESTRICTED USES

DO NOT remove from the cradle assembly. Removal of the generator from the cradle assembly may cause excessive vibration and damage to the engine generator set.

DO NOT install and operate these portable generators in a small compartment., i.e. generator compartment of vehicles, motor homes or travel trailers. These compartments will not allow enough free flow fresh air to reach the engine generator set for cooling and will cause the unit to overheat damaging both the engine and the generator. Small compartments will also develop hot spots where there is very little air flow and may cause a fire.

DO NOT attempt to operate at 50 cycles. These units are designed and governed to operate at 60 Cycles only.

UNIT CAPABILITIES

Generator Connections - The diagram below represents a typical 4000 watt generator. Receptacles A and B are the two 120 Volt duplex receptacles. Up to 2000 watts at 120 volts (16.6 Amps) can be taken from the generator at each of the receptacles. This generator produces 120 and 240 volt, 60 Hz (Hertz), AC (Alternating Current).

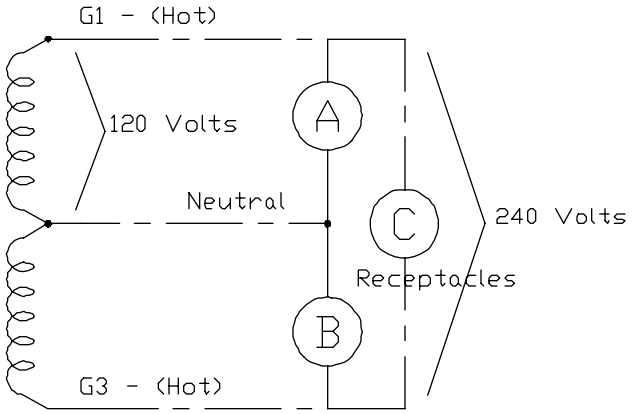

NOTE: The AP3000 generator is a 120 volt only generator and contains only the "A" circuit shown in this schematic.

CAUTION: EQUIPMENT DAMAGE

CAUTION MUST BE EXERCISED TO PREVENT OVERLOADING EITHER OF THE GENERATOR 120 VOLT OUTPUT CIRCUITS (A OR B).

Check the appliance or tool nameplates for the current and voltage to insure compatibility. Remember that power taken from receptacle C reduces the power available at both A and B. Any remaining 120 volt loads should be equally divided between A and B. Failure to split the load will cause permanent damage to the stator. Although circuit breakers are provided, damage due to overloading constitutes abuse and will not be warranted. Refer to the generator nameplate for your unit's capabilities.

Starting Electric Motors - Electric motors require much more current (amps) to start them than to run them. Some motors, particularly low cost split-phase motors, are very hard to start and require 5 to 7 times as much current to start them as to run them. Capacitor motors are easier to start and usually require 2 to 4 times as much current to start them as to run them. Repulsion Induction motors are the easiest to start and usually require 1 1/2 to 2 1/2 times as much to start them as to run them.

Most fractional horsepower motors take about the same amount of current to run them whether they are of Repulsion-Induction (RI), Capacitor (Cap), or Split-Phase (SP) type. The chart below shows the approximate current required to start and run various types and sizes of 120 volt 60 cycle electric motors under average load conditions.

	RUNNING			STARTING AMPS	
HP	AMPS SP	AMPS CAP	AMPS RI		
1/6	3.2	16 TO 22		6 TO 13	5 TO 8
1/4	4.5	22 TO 32		9 TO 18	7 TO 12
1/3	5.2	26 TO 35		10 TO 21	8 TO 17
1/2	7.2	NOT MADE		14 TO 29	11 TO 18
1	13.0	NOT MADE		26 TO 52	20 TO 33

The figures given above are for an average load such as a blower or fan. If the electric motor is connected to a hard starting load such as an air compressor, it will require more starting current. If it is connected to a light load, or no load such as a power saw, it will require less starting current. The exact requirement will also vary with the brand or design of the motor.

Self-excited generators respond to severe overloading differently than the power line. When overloaded, the engine is not able to supply enough power to bring the electric motor up to operating speed. The generator responds with high initial starting current, but the engine speed drops sharply. The overload may stall the engine. If allowed to operate at very low speeds, the electric motor starting winding will burn out in a short time. The generator winding might also be damaged.

PREPARING THE UNIT

CAUTION: EQUIPMENT DAMAGE

RUNNING THE GENERATOR SET UNDER THESE CONDITIONS MAY RESULT IN DAMAGING THE GENERATOR STATOR AS WELL AS THE MOTOR WINDING.

Because the heavy surge of current required for starting motors is required for only an instant, the generator will not be damaged if it can bring the motor up to speed in a few seconds of time. If difficulty is experienced in starting motors, turn all other electrical loads off and if possible reduce the load on the electric motor.

UNPACKING

CAUTION: EQUIPMENT DAMAGE

*THIS UNIT HAS BEEN SHIPPED WITHOUT OIL. Failure to maintain the engine oil at the proper level will result in serious engine dama*ge.

When you unpack your new ENGINE GENERATOR be sure to remove all the information sheets and manuals from the carton.

1. This power plant was in good order when shipped. Inspect the power plant promptly after receiving it. If damage is noted, notify the transportation company immediately; request proper procedures for filing a “concealed damage” claim. Title to the equipment and responsibility for filing a claim rests with you when a generator is sent F.O.B. shipping point. Only you can legally file a claim.
2. Before proceeding with the preparation of your new engine generator set for operation, take a couple of minutes to ensure the unit you have received is the correct model and review the specification pages in this manual to ensure this unit fits your job requirements.
3. After removing the engine generator from the carton locate and remove the shipping straps attached to the generator shock mounts. See attached tag for removal instructions.

UNIT PREPARATION

Before your engine generator was shipped from our factory it was fully checked for performance. The generator was load tested to its full capacity, and the voltage and frequency were carefully checked and adjusted.

1. **Lubrication** - Before starting the engine, fill the crankcase to the proper level with a good quality oil. The recommended grade of oil and quantity of oil required is listed in both the engine operator's manual and in the specifications section (pg 1) of this manual. The necessity of using the correct oil, and keeping the crankcase full cannot be overemphasized. Engine failures resulting from inadequate or improper lubricant are considered abuse and are not covered by the generator or the engine manufacturer's warranty.
2. **Gasoline Fuel** - When using gasoline always use a good grade of unleaded fuel. Leaded gasoline may be used if unleaded is not available. Gasoline containing alcohol, such as gasohol is not recommended. However, if gasoline with alcohol is used, it must not contain more than 10 percent Ethanol and must be removed from the engine during storage. DO NOT use gasoline containing methanol. Always insure that the fuel is clean and free of all impurities.

WARNING: FIRE DANGER

Gasoline and its fumes are VERY explosive when proper precautions are not taken.

Never use gasoline that has been stored for an extended period of time as the fuel will lose it's volatile properties and you will be left with only the varnish residue. This varnish like substance will clog the carburetor and will not burn properly. The use of a fuel additive, such as STA-BIL, or an equivalent will minimize the formation of fuel gum deposits. If a unit has been out of operation for an extended period of time it is best to drain old fuel from the engine and replace with fresh fuel before attempting to start.

LOW OIL LEVEL SHUTDOWN SYSTEM

Briggs & Stratton powered generators - Some engine generator sets come equipped standard with the Briggs & Stratton OILGARD warning system.

This low oil warning system will automatically stop the engine before the oil level reaches an operational danger point. This feature is designed to prevent costly repairs and downtime.

The OILGARD system uses a float in the engine crankcase to sense the oil level. If a low oil level condition should occur during operation, the float will ground out the magneto impulse, “killing” the engine. In addition, there is an indicator light mounted on the engine shroud near the recoil starter. This light will blink on and off to indicate

a low oil level condition when you are attempting to start the unit. To get the engine started, you must add the required amount of oil to the engine crankcase.

Use of the OILGARD system on applications that are subject to shock, bumping or severe angles of operation (in excess of 15 degrees) should be avoided. This is especially true if an unexpected **shutdown would cause a safety hazard** or serious inconvenience for the operator. To disable the OILGARD, remove the wire attached to the sensor unit mounted on the engine crankcase. The wire should be insulated with a connector or tape.

Honda powered generators - These engine generator sets come equipped standard with the Honda Oil Alert System.

The Oil Alert system is designed to prevent damage caused by an insufficient amount of oil in the crankcase. Before the oil level in the crankcase can fall below a safe limit, the Oil Alert system will automatically shut down the engine (the engine switch will remain in the ON position).

If the Oil Alert system shuts down the engine, the Oil Alert lamp will flash when you attempt to start the engine and it will not run. If this occurs, check the engine oil level.

INITIAL START UP

Use the following checklist to verify the correct preparation of the engine generator before starting.

Before Starting always Check:

1. Engine oil, fill as required with correct grade and quantity.
2. Fuel level, fill as required with clean fresh fuel.
3. Automatic Idle is in the 'Off' position
4. Visually for loose parts.

STARTING

The throttle control on these generators is preset and locked to operate at 3600 RPM (nominal) with no load speed set at 3750 RPM. Only a trained service technician should be allowed to adjust this speed setting. See “Operating Speed” section for additional information.

NOTICE: ENGINE START LOCKOUT

*This unit **will not start** if it is low on oil. The lubricating oil level must be at the **full** mark before the engine will start.*

MANUAL STARTING - Refer to the engine manual for additional starting, operating, and stopping instructions.

1. Turn on the fuel supply.
2. Move the choke to the full "on" position. A warm engine will require less choking than a cold engine.
3. Grasp starter grip and pull slowly until starter engages, then pull cord rapidly to overcome compression, prevent kickback and start the engine. Repeat if necessary.
4. When the engine starts, open the choke gradually.
5. The engine should promptly come up to operating speed.

CAUTION: EQUIPMENT DAMAGE

Never permit the choke to remain on after the engine has run for a short time. It is not necessary to choke the engine when it is warm. Avoid over-choking.

STARTING HINTS

1. Cold weather
   a. Use the proper oil for the temperature expected.
   b. Use fresh winter grade fuel. Winter grade gasoline is blended to improve starting. Do not use summer gasoline.
   c. A slightly richer fuel mixture will usually improve cold starting.
2. Hot weather
   a. Use the proper oil for the temperature expected.
   b. Use only summer blended gasoline. Using gasoline left over from winter may cause the unit to vapor lock.
   c. DO NOT over-choke the unit.

STOPPING AND STORAGE

1. To stop the engine turn the stop run lever or switch on the engine to the stop position. This will ‘ground out’ the spark stopping the engine.
2. Before extended storage (over 30 days) certain precautions must be taken to ensure the fuel doesn’t deteriorate and clog the fuel system. Note: The use of a fuel additive, such as STA-BIL, or an equivalent, will minimize the formation of gum deposits during storage. Such an additive may be added to gasoline in the engine’s fuel tank or to gasoline in a storage container.

   a. Remove the remaining fuel from the fuel tank.
   b. Start the engine and allow it to run until all the fuel in the carburetor and the fuel lines has been used up and the engine stops.
   c. While the engine is warm, drain the oil and refill with fresh oil.
   d. Remove the spark plug, pour approximately 1/2 ounce (15 cc) of engine oil into the cylinder and crank slowly to distribute oil. Replace spark plug.
   e. Clean dirt and chaff from cylinder, cylinder head fins, blower housing, rotating screen and muffler areas.
   f. Store in a clean and dry area.

OPERATING SPEED

The engine-generator must be run at the correct speed in order to produce the proper electrical voltage and frequency.

CAUTION: EQUIPMENT DAMAGE

The output voltage should be checked to insure the generator is working properly prior to connecting a load to the generator. Failure to do so could result in damage to equipment plugged into the unit and possible injury to the individual.

All engines have a tendency to slow down when a load is applied. When the electrical load is connected to the generator, the engine is more heavily loaded, and as a result the speed drops slightly. This slight decrease in speed, together with the voltage drop within the generator itself, results in a slightly lower voltage when the generator is loaded to its full capacity than when running no load. The slight variation in speed also affects the frequency of the output current. This frequency variation has no appreciable effect in the operation of motors, lights and most appliances. However, electronic equipment and clocks will be affected if correct RPM is not maintained. See Load vs. Output chart.

Although individual units and models may vary slightly, the normal voltage and frequency of the engine-generators described in this book are approximately as follows, under varying loads:

LOAD vs. OUTPUT

Generator Load Applied*	Speed (RPM)	Frequency (Hz)	Generator voltage 120V Recpt.
None	3750	62.5	129V
Half	3600	60.0	120V
Full	3540	59.0	115V

*Portion of plant's rated output current.

The speed of the engine was carefully adjusted at the factory so that the generator produces the proper voltage and frequency. For normal usage, the speed setting should not be changed. If the generator is being run continuously on a very light load, it is often advisable to lower the operating speed slightly. Whenever making any speed adjustments check the unit with a voltmeter or tachometer and be sure the speed is correct.

Lower voltage may damage both the generator and any load connected to it. Running the engine at excessively high speeds results in high voltage, which may significantly shorten the life of appliances being used.

Output voltage should be checked periodically to ensure continued proper operation of the generating plant and appliances. If the generator is not equipped with a voltmeter, it can be checked with a portable meter.

Frequency can be checked by using an electric clock with a sweep second hand. Timed against a wrist watch or a stop watch, the clock should be correct within +/- 2 seconds per minute.

CONNECTING THE LOADS

Applying The Load - Allow the engine to warm up for two or three minutes before applying any load. This will allow the engine to reach normal operating temperature and oil to circulate throughout the engine. A short warm-up time will permit the engine to work more efficiently when the load is applied and will reduce the wear in the engine, extending its life.

Receptacles have been provided to allow loads to be connected to the generator. The loads should be added one at a time. If a large motor is being started or multiple motors are being started, they should be started individually and the largest should be started first.

CAUTION: EQUIPMENT OVERLOAD

Keep the generator load within the generator and receptacle nameplate rating. Overloading may cause damage to the generator and/or the loads.

Most electric tools and appliances will have the voltage and amperage requirements on their individual nameplates. When in doubt consult the manufacturer or a local electrician. The nameplate amperage rating for electric motors can be misleading. See "Starting Electric Motors" in Unit Capabilities (page 3).

These engine generator sets are inherently self regulating based on engine speed. The engine governor will automatically adjust itself to the load. No harm to the generator will result if it is operated with no load connected.

Proper utilization of the receptacles located on the control panel is necessary to prevent damage to either the receptacles or the generator. The generator is a limited source of electrical power, therefore pay special attention to the receptacle and generator ratings. The nameplate rating can be obtained through a single receptacle as long as the receptacle amperage rating is not exceeded.

Grounding - All units must be grounded. Drive a 3/4 or 1" copper pipe or rod into the ground close to the engine-generator set. The pipe must penetrate moist earth. Connect an approved ground clamp, to the pipe. Run a no. 10 Awg wire from the clamp to the generator ground lug on the "end cover". Do not connect to a water pipe or to a ground used by a radio system.

The engine-generators covered in this manual were designed for portable use. Do NOT install or operate this generator indoors. The unit should be stored in a warm dry location. During a power outage, move the unit

outdoors to a flat dry location such as a driveway or sidewalk.

Many homes today are wired for at least 60 to 100 Amp entrance service, much greater than the capacity of these portable generators. Do not attempt to power an entire home with this portable generator. This generator set is suitable for powering individual appliances or emergency lighting.

ENGINE CARE

If major engine service or repair is required contact an authorized engine service center. The manufacturer of these engines has established an excellent world-wide engine service organization. Engine service is very likely available from a nearby authorized dealer or distributor. Check the yellow pages of your local telephone directory under “Engines-Gasoline” for the closest engine repair center or ask the dealer from whom you purchased the power plant.

1. **Change the oil** after the first five hours of operation and every 50 hours thereafter under normal operating conditions. Change engine oil every 25 hours of operation if the engine is operated under heavy load, or in high ambient temperatures.

a. Remove oil drain plug at base of the engine and drain the oil with the engine warm.
b. Replace oil drain plug.
c. Remove oil filler plug and refill with new oil. Refer to the table in the engine manual for the proper grade of oil based on your operating temperature.
d. Replace filler plug.

2. **Checking the Oil Level**: The oil level must always be checked before the engine is started. Take care to remove any dirt or debris from around the oil fill plug before removing. Be sure the oil level is maintained. FILL TO POINT OF OVERFLOWING or on units with the extended oil fill to the “FULL” mark on the dipstick.

3. **Cartridge Air Cleaner** - Remove and clean cartridge yearly or after every 25 hours, whichever occurs first. Service more often if necessary. Clean by tapping gently on flat surface. If very dirty, replace the cartridge using only original equipment parts available at any engine service center.

Do not use petroleum solvents, such as kerosene, to attempt to clean the cartridge. They may cause deterioration of the cartridge. DO NOT OIL CARTRIDGE, DO NOT USE PRESSURIZED AIR TO CLEAN OR DRY CARTRIDGE.

4. **Dual Element Air Cleaner** - Clean and re-oil foam pre-cleaner at three month intervals or every 25 hours, whichever occurs first. Service more often under dusty conditions.

a. Remove knob and cover.
b. Remove foam pre-cleaner by sliding it off the paper cartridge.
c. Wash foam pre-cleaner in kerosene or liquid detergent and water
d. Wrap foam pre-cleaner in cloth and squeeze dry.
e. Saturate foam pre-cleaner in engine oil. Squeeze to remove excess oil.
f. Install foam pre-cleaner over paper cartridge. Reassemble cover and screw down tight.

Replace the cartridge included with Dual Element Air Cleaner yearly or every 100 hours. Service more often if necessary.

5. **Spark Plug** - Clean and reset gap at .030" every 100 hours of operation. Do not blast clean spark plug. Clean by scraping or wire brushing and washing with a commercial solvent. Poor spark will occur if terminal does not fit firmly on spark plug. If this happens reform the terminal to fit firmly on spark plug tip.

GENERATOR CARE

Proper care and maintenance of the generator is necessary to insure a long trouble free life.

1. **Exercising The Generator** - The generator should be operated every three to four weeks. It should be operated for a period of time sufficient to warm the unit up and to dry out any moisture that has accumulated in the windings. If left, this moisture can cause corrosion in the winding. Frequent operation of the engine generator set will also insure that the set is operating properly should it be needed in an emergency.

2. **Generator Maintenance** - Any major generator service including the installation or replacement of parts should be performed only by a qualified electrical service technician. USE ONLY FACTORY APPROVED REPAIR PARTS.

a. Bearing - The bearing used in these generators is a heavy duty double sealed ball bearing. They require no maintenance or lubrication.

b. Receptacles - Quality receptacles have been utilized. If a receptacle should become cracked or otherwise damaged, replace it. Using damaged or cracked receptacles can be both dangerous to the operator and destructive to the equipment.

CLEANING

Remove dirt and debris with a cloth or brush. DO NOT use high pressure spray to clean either the engine or the generator. This high pressure spray could contaminate the fuel system and the generator components.

OPERATOR CARE AND MAINTENANCE

1. Keep the air inlet screen on both the engine and generator free of any dirt or debris to insure proper cooling. At least yearly remove the blower housing on the engine and clean the chaff and dirt out of the engine cooling fins and flywheel. Clean more often if necessary. Failure to keep these areas clean may cause overheating and permanent damage to the unit.

2. Periodically clean muffler area to remove all grass, dirt and combustible debris to prevent a fire.

3. On engine mufflers equipped with spark arresters, the spark arrester must be removed every 50 hours for cleaning and inspection. Replace if damaged.

TROUBLESHOOTING HINTS

PROBLEM (SYMPTOMS)	POSSIBLE CAUSES
Won't Start	*Low Oil Level. *Fouled spark plug. *Out of fuel. *Stop switch in stop position.
Voltage too low	*Engine speed is too low. *Generator overloaded. *Defective rectifier. *Defective stator. *Defective rotor (field).
Circuit Breaker Trips	*Defective load. *Defective receptacle.
Voltage too high	*Engine speed is too high.
Generator overheating	*Overloaded. *Insufficient ventilation.
No output voltage	*Short in load (disconnect). *Broken or loose wire. *Defective receptacle. *No residual magnetism (in generator). *Defective stator. *Defective rotor (field). *Shorted capacitor. *Defective rectifier.

AP3000 SCHEMATIC

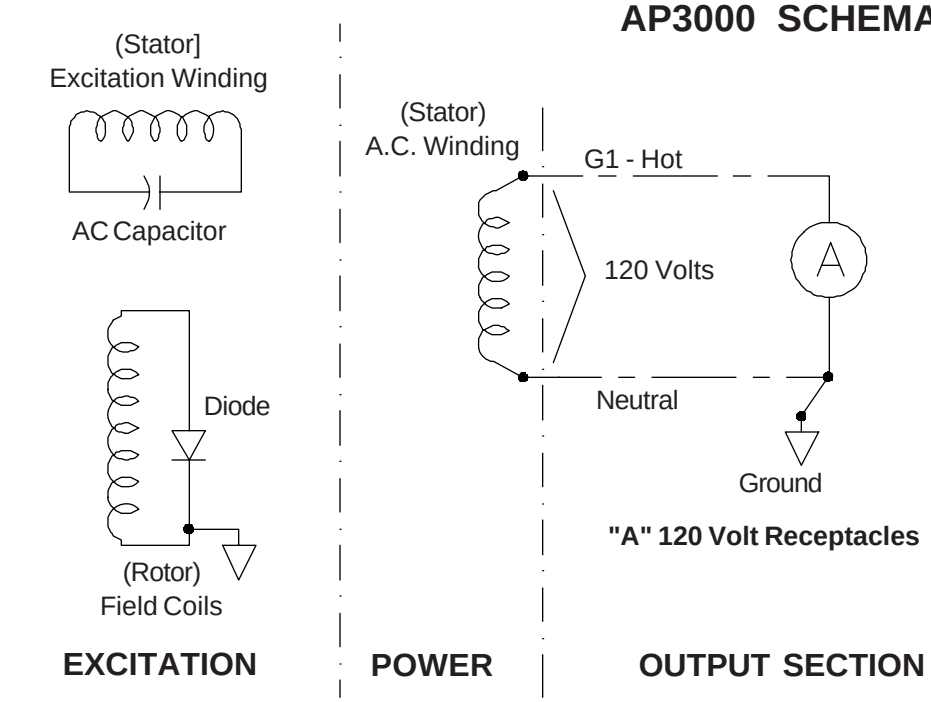

AP4500 SCHEMATIC
AP5000H SCHEMATIC

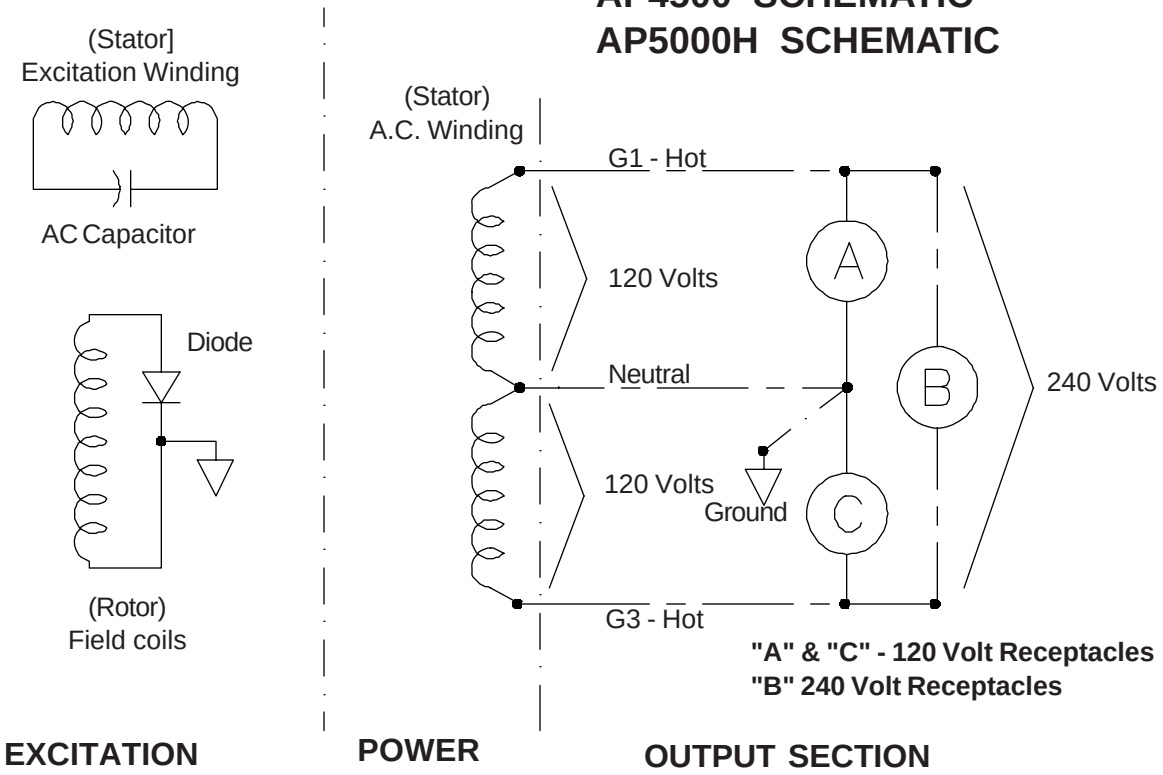

12 MONTH
Limited Warranty

WINCO warrants to the original purchaser that the alternator is free from defects in workmanship and material for a period of **one year*,** provided it is installed, operated and maintained in accordance with **WINCO** written instructions.

***NOTE: Units used for rental, demonstrations, commercial or prime power applications such as construction or utility, are warranted for 90 days. Units that are resold are not covered under this warranty. Any further warranty, whether expressed or implied, rests solely with the reseller.**

WINCO's sole liability, and Purchaser's sole remedy for a failure under this warranty, shall be limited to the repair of the product. At **WINCO's** option, material found to be defective in material or workmanship under normal use and service will be repaired or replaced. This warranty does not include circuit breakers, receptacles or ENGINES. Engines are covered exclusively by the warranties of their respective manufacturers.

THERE IS NO OTHER EXPRESS WARRANTY.

To the extent permitted by law, any and all warranties are limited to 12 months from date of purchase. The user shall determine the suitability of the product for its intended use prior to placing the unit in service. The user shall assume all risks and liability in connection with determining the suitability of the unit for its particular use. Neither the manufacturer nor the seller shall be liable for any injury, loss or damage arising out of improper use or operation of this unit. In no event is **WINCO** liable for incidental or consequential damages.

Some states do not allow limitation on the duration of implied warranty and some states do not allow the exclusion or limitation of incidental or consequential damages, so the above limitations may not apply in every instance. This warranty gives you specific legal rights which may vary state to state.

WINCO reserves the right to change or improve its products without incurring any obligations to make such changes or improvements on products previously purchased.

WINCO does not warrant products which have been subjected to misuse, negligence, modified or altered in any way or have been involved in an accident.

For warranty service, return the product, transportation charges prepaid, to your nearest **WINCO** Authorized Service Center or to **WINCO** at Le Center Minnesota. When requesting warranty service, evidence of original purchase date must be presented.

WINCO®
INCORPORATED
225 S. Cordova Ave.
LeCenter, Mn 56057

Phone - 612-357-6831
Fax - 612-357-4857