WINCO INC®
A Division of DTI Dyna Technology Inc

ILLUSTRATED PARTS LIST

WL12000HE/H
WL12000HE/H (50 STATE)

BIG DOG

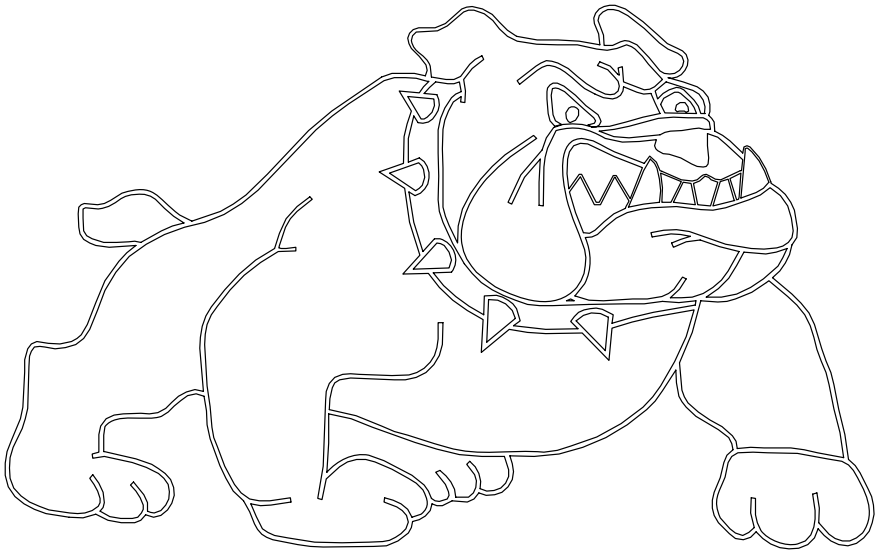

WINCO INC®
A Division of DTI Dyna Technology Inc

225 S. CORDOVA AVE.
LECENTER, MN 56057
507-357-6821
SERVICE DEPT.
507-357-6831

GENERATOR ASSEMBLY

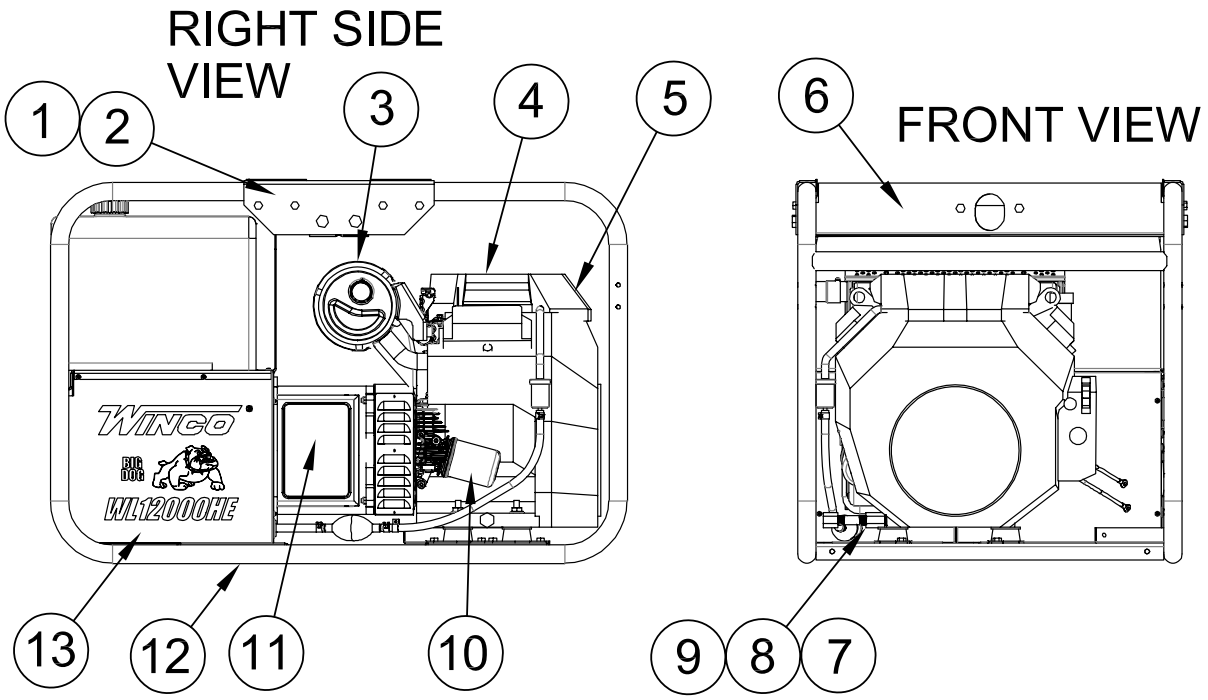

REF #	PART NUMBER	QTY	DESCRIPTION
1	300147-3	2	Lifting Eye Support
2	300149-2	4	Cradle Lifting Support
3	VHRM6	1*	Honda Muffler
4	17210-Z6L-000	1*	Air Filter
5	15959-006	1	Engine, Honda GX630RVXE2
6	300148-3	2	Lifting Eye
7	300349-2	1	Oil Drain Adapter M20-1.5(M)
8	16456-005	1	3/8 X 3” Pipe Nipple
9	21858-000	1	3/8” Pipe Cap
10	15400-RTA-004	1*	Oil Filter
11	351836-1	1	Generator, Mecc Alte Spa Model, S20FS-160/A
12	63073-026	1	Welded Cradle Assembly
13	98101-011S	1**	Side Panel (WL12000HE/H)
NI	ZFR5F	2***	NGK Spark Plug
NI	15769-000	1	Spark Arrestor
NI	21698-001	50	Torx Screws
NI	Not Illustrated		
*	Honda Part #		

** Side Panel for Model WL12000HE/H (50 State) is on the Fuel Assembly drawing.

*** NGK Part #

GENERATOR ASSEMBLY

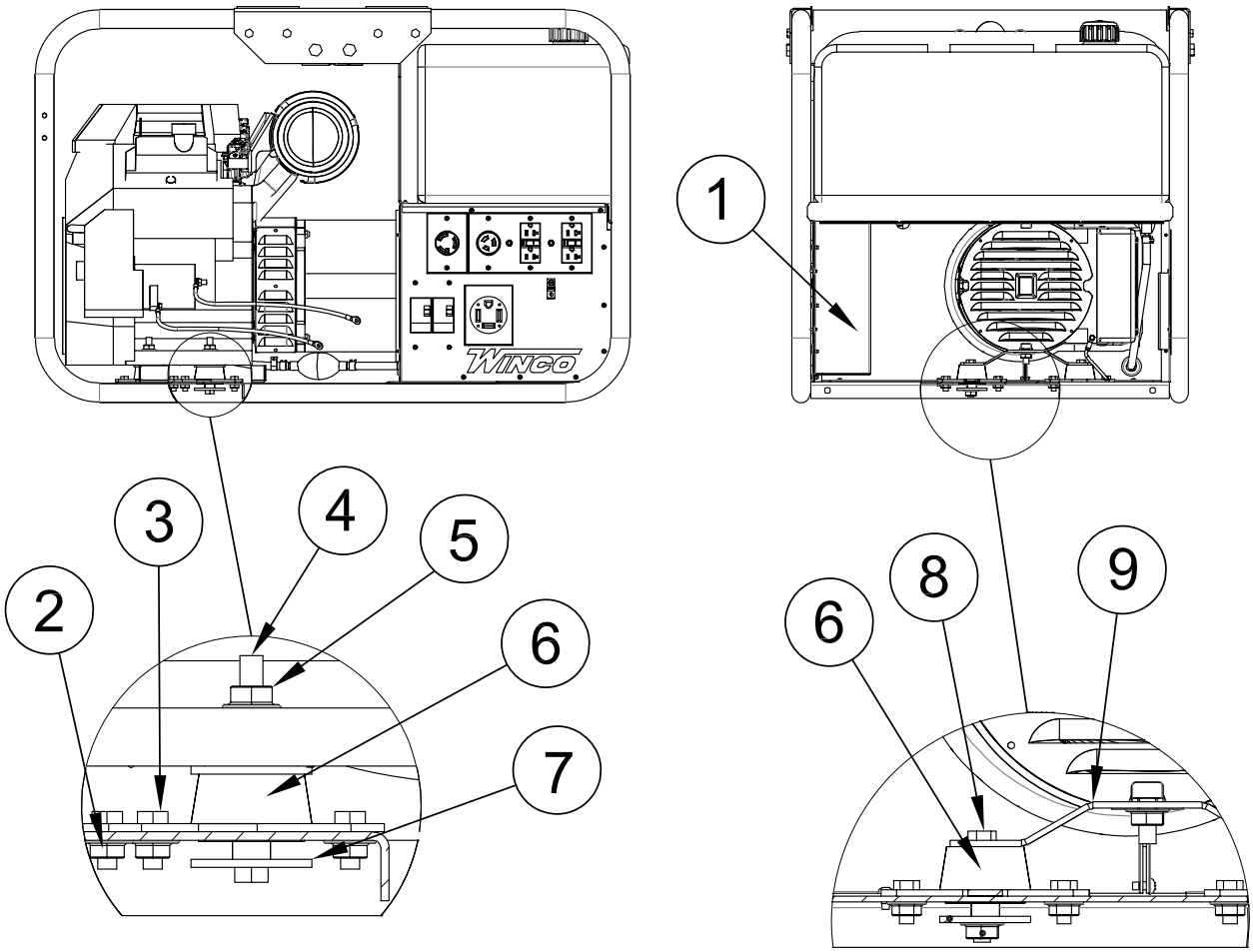

REF #	PART NUMBER	QTY	DESCRIPTION
1	300146-4S	1	Rear Receptacle Cover
2	16249-000	12	5/16”-18 Flange Nut
3	467-000	12	5/16”-18 X ¾” Bolt
4	91658-014	4	3/8”-16 X 3.5” Bolt
5	16250-000	7	3/8”-16 Flange Nut
6	98807-000	6	Shockmount
7	98806-000	10	Washer
8	91658-001	5	3/8”-16 X 1” Bolt
9	16335-004	1	Generator Support

RECEPTACLE BOX & BATTERY ASSEMBLY WL12000HE/H

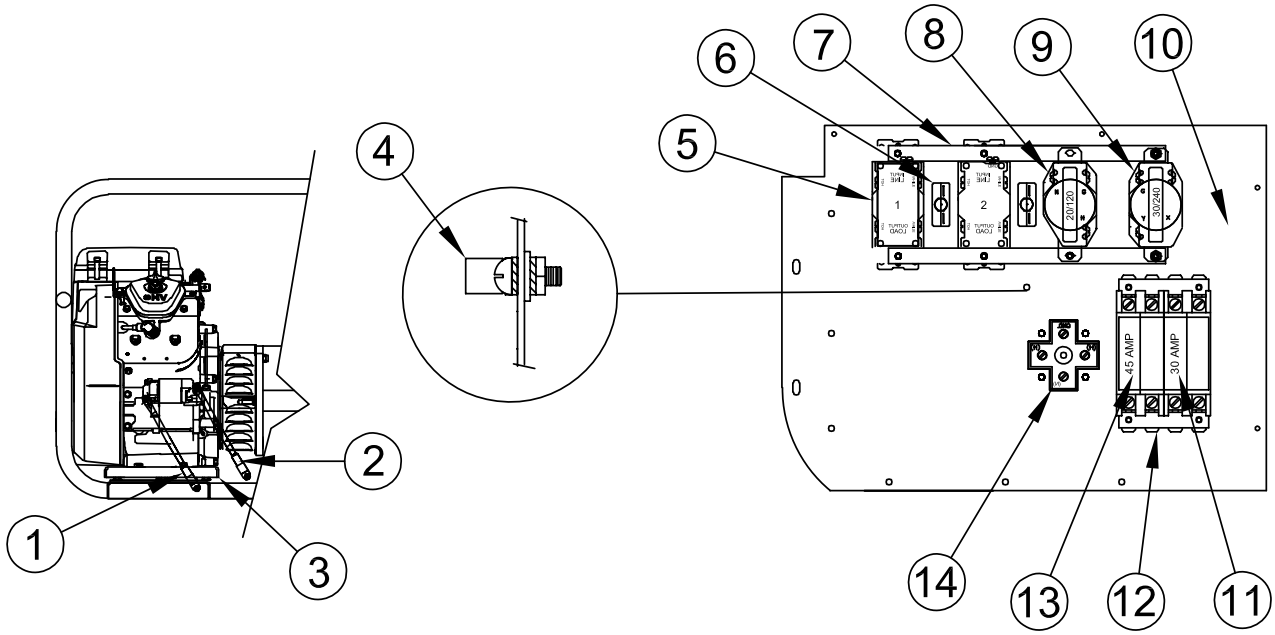

REF #	PART NUMBER	QTY	DESCRIPTION
1	15767-021	1	Negative (-) Battery Cable
2	15767-010	1	Positive (+) Battery Cable
3	15676-008	1	Battery Tray
4	48042-001	1	Ground Lug
5	15147-001	2	20A, 125V, GFCI Receptacle
6	91286-001	2	20A Circuit Breaker
7	64045-001	2	Mounting Strap
8	56279-000	1	20A, 125V Twistlock Recpt.
9	57324-000	1	30A, 240V Twistlock Recpt.
10	99055-022S	1	Front Panel, Recpt. Box
11	57030-002	1	30A 2-Pole Circuit Breaker
12	64045-009	2	Mounting Strap
13	57030-007	1	45A 2-Pole Circuit Breaker
14	300136	1	60A, 120V / 240V Recectacle NEMA 14-60R
NI	300137	Reference	60A, 120V / 240V Plug NEMA 14-60P
NI	300143	1	Battery Hold Down Kit
NI	Not Illustrated		

RECEPTACLE BOX & BATTERY ASSEMBLY WL12000HE/H (50 STATE)

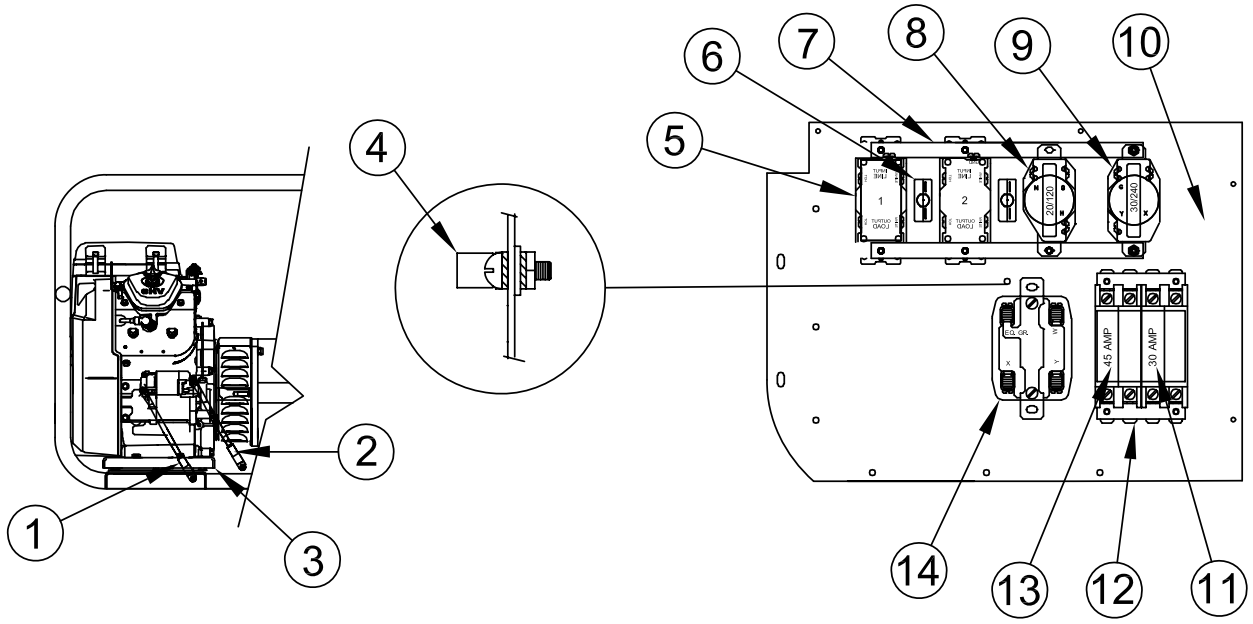

REF #	PART NUMBER	QTY	DESCRIPTION
1	15767-021	1	Negative (-) Battery Cable
2	15767-010	1	Positive (+) Battery Cable
3	15676-008	1	Battery Tray
4	48042-001	1	Ground Lug
5	15147-001	2	20A, 125V, GFCI Receptacle
6	91286-001	2	20A Circuit Breaker
7	64045-001	2	Mounting Strap
8	56279-000	1	20A, 125V Twistlock Recpt.
9	57324-000	1	30A, 240V Twistlock Recpt.
10	99055-033S	1	Front Panel, Recpt. Box
11	57030-002	1	30A 2-Pole Circuit Breaker
12	64045-009	2	Mounting Strap
13	57030-007	1	45A 2-Pole Circuit Breaker
14	91889-000	1	50A, 120V / 240V Alpha Lock Receptacle
NI	64493-000	Reference	50A, 120V / 240V Alpha Lock Plug
NI	300143	1	Battery Hold Down Kit
NI	Not Illustrated		

FUEL SYSTEM
ASSEMBLY WL12000HE/H

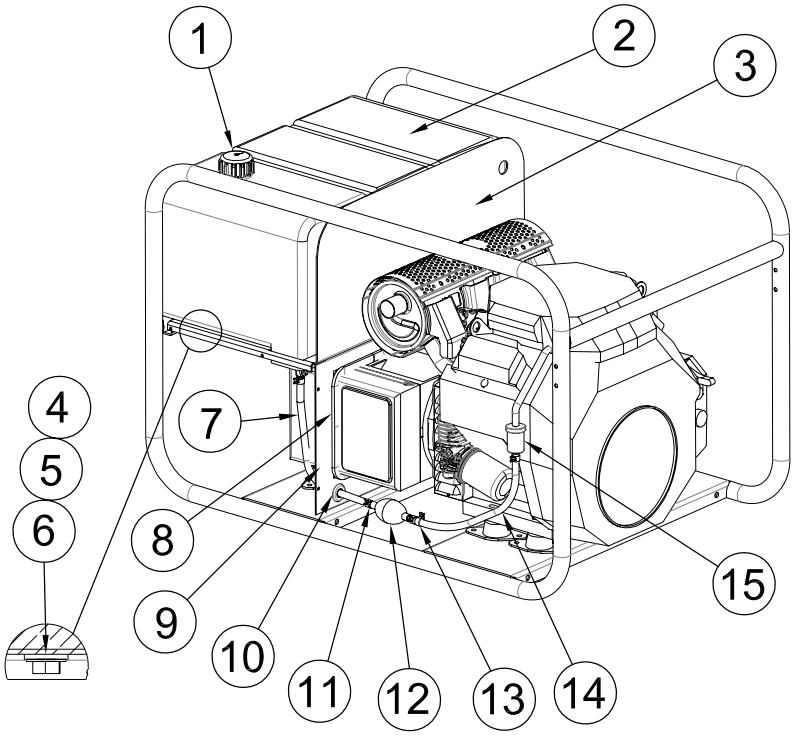

REF #	PART NUMBER	QTY	DESCRIPTION
1	62396-006	1	Fuel Cap with Gauge
2	16316-001	1	15 Gallon Fuel Tank
3	15462-026S	1	Fuel Tray
4	91658-011	4	3/8”-16 X .75 Bolt
5	20604-000	4	3/8” Washer
6	16133-001	4	Leather Washer
7	40078-000	13”	¼” Fuel Line
8	15287-017	1	Air Seal 24”
9	15464-004S	1	Generator Divider
10	23917-000	1	Grommet
11	62999-001	1	.5 OD Red Hose Clamp
12	62391-000	1	Primer Bulb
13	48039-008	1	Nylon Clamp
14	40078-000	20”	¼” Fuel Line
15	16910-Z6L-003	1*	Fuel Filter
NI	16700-Z6L-003	1*	Fuel Pump
NI	15464-010S	1	Generator Divider
NI	15287-016	1	Air Seal 15.75”
NI	Not Illustrated		
*	Honda Part #		

FUEL SYSTEM ASSEMBLY WL12000HE/H (50 STATE)

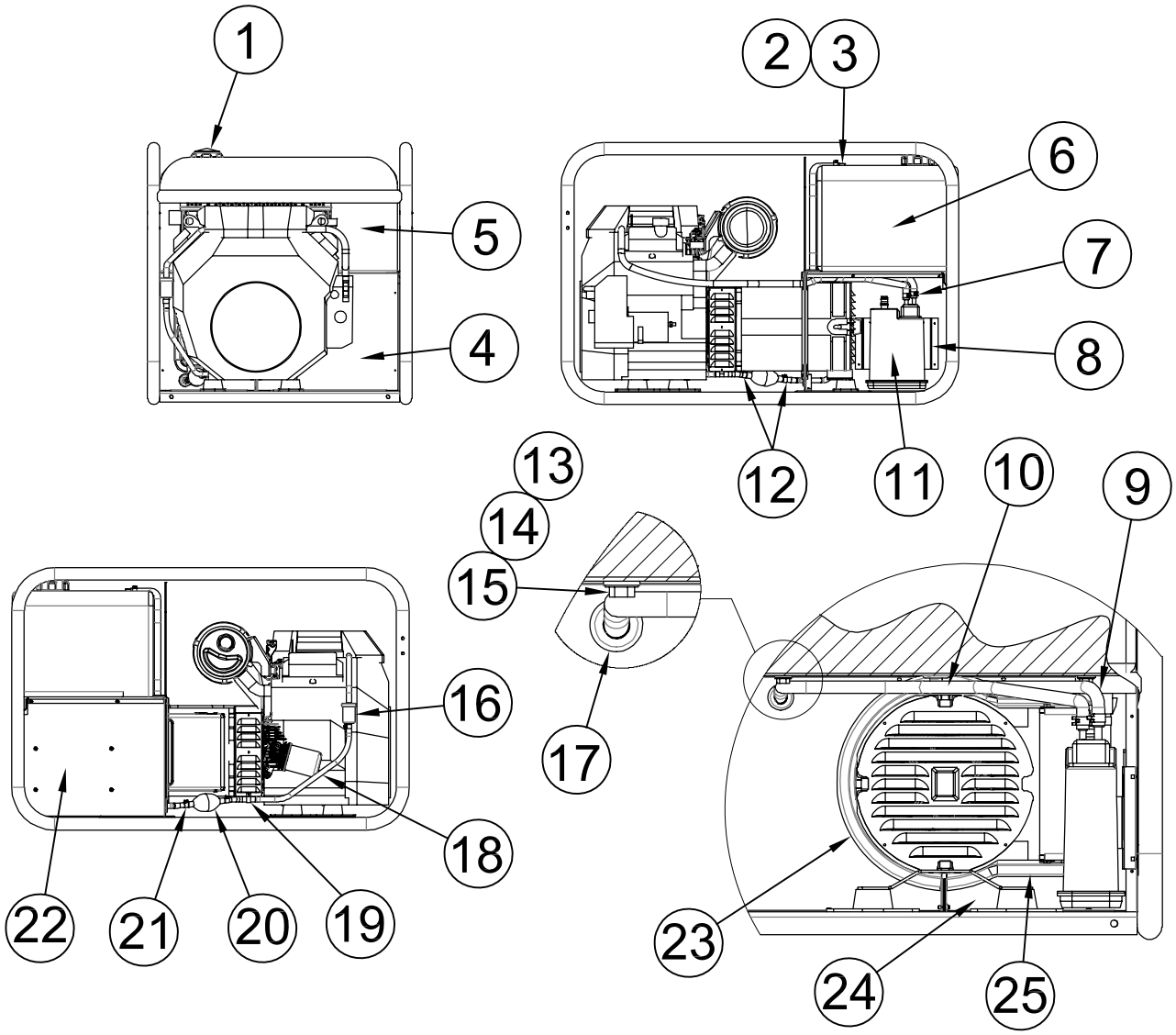

REF #	PART NUMBER	QTY	DESCRIPTION
1	62397-001	1	Fuel Cap, One Way Vent
2	62409-000	1	Bushing
3	98435-001	1	Hose Fitting 3/8” Elbow
4	15462-041	1	Fuel Tray
5	15464-015S	1	Generator Divider
6	16316-001	1	15 Gallon Fuel Tank
7	62999-004	3	.69 OD Hose Clamp
8	81900-000	1	Carbon Canister Bracket
9	55505-000	31”	3/8” Fuel Line
10	55505-000	43”	3/8” Fuel Line
11	80900-000	1	Carbon Canister
12	62999-001	4	.5 OD Red Hose Clamp
13	91658-011	4	3/8”-16 X .75 Bolt
14	20604-000	4	3/8” Washer
15	16133-001	4	Leather Washer
16	16910-Z6L-003	1*	Fuel Filter
17	23917-000	3	Grommet
18	40078-000	20”	¼ “ Fuel Line
19	48039-008	1	Nylon Clamp
20	62391-000	1	Fuel Primer Bulb
21	40078-000	13”	¼” Fuel Line
22	98101-014S	1	Side Panel
23	15287-016	15.75”	Air Seal
24	15464-013S	1	Generator Divider
25	15287-017	24”	Air Seal
NI	16700-Z6L-003	1*	Fuel Pump
NI	Not Illustrated		
*	Honda Part #		

4-WHEEL DOLLY KIT ASSEMBLY

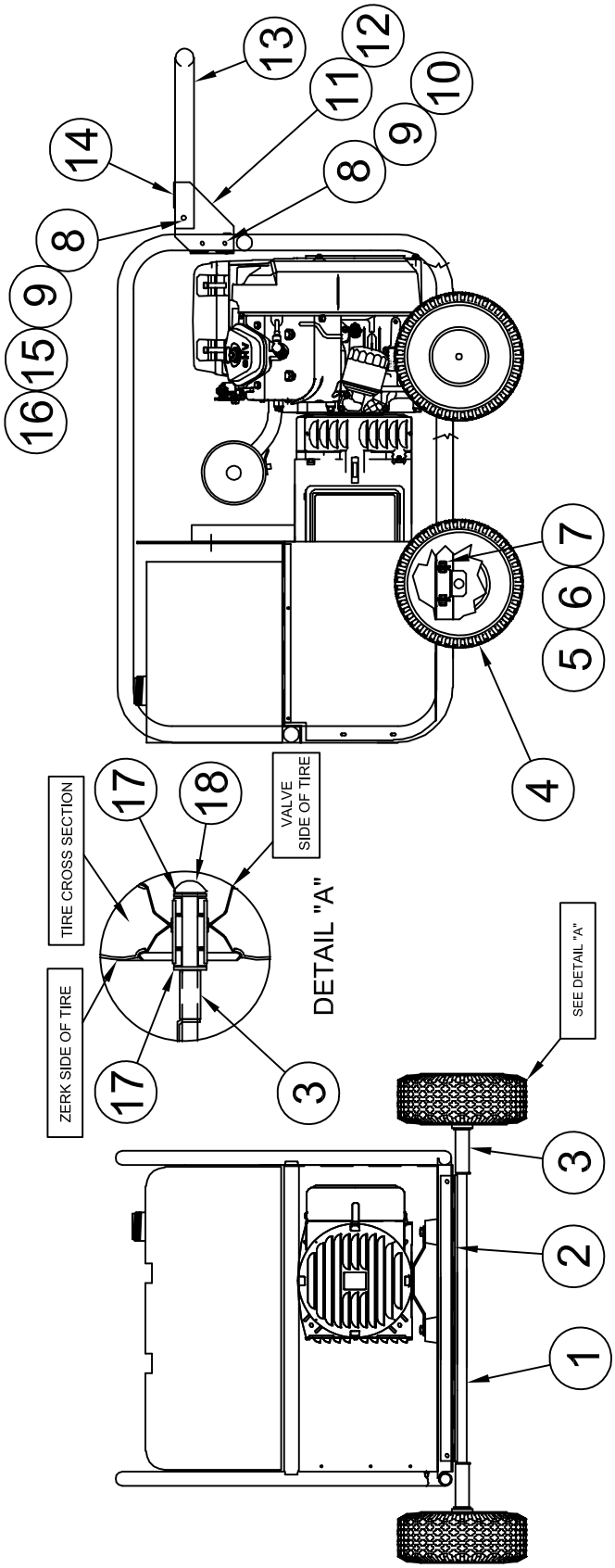

REF #	PART NUMBER	QTY	DESCRIPTION
1	64326-020	2	Axle
2	15775-006	1	Axle Bracket
3	64688-007	4	Axle Spacer
4	43657-003	4	Tire & Hub
4	43657-004	4	Foam Filled Tire & Hub
4	43657-005	4	Hard Rubber Tire & Hub
5	458-000	8	5/16”-18 Hex Nut
6	480-000	8	5-/16”-18 Lock Washer
7	465-000	8	5/16”-18 X ¾” Bolt
8	479-000	6	¼” Lock Washer
9	47517-000	6	¼”-20 Nylock Hex Nut
10	56842-004	4	¼”-20 X 1.75” Bolt
11	300066-4	1	Left Handle Support
12	300066-3	1	Right Handle Support
13	61857-004	1	Handle
14	62912-000	3”	Foam Strip
15	96286-006	2	Nylon Washer
16	56842-005	2	¼”-20 X 2” Bolt
17	1178-000	8	Flat Washer
18	64327-000	4	Hubcap
NI	15775-007	1	Axle Bracket, Engine End
NI	93402-002	2	Hole Plug
NI	Not Illustrated		

GENERATOR END SCHEMATIC

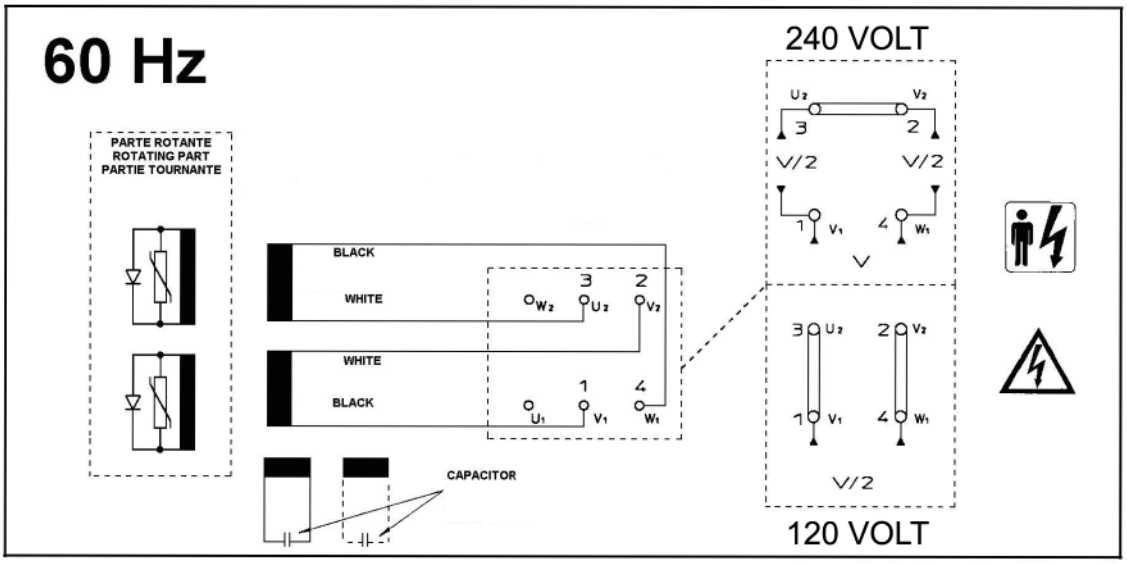

GENERATOR ASSEMBLY

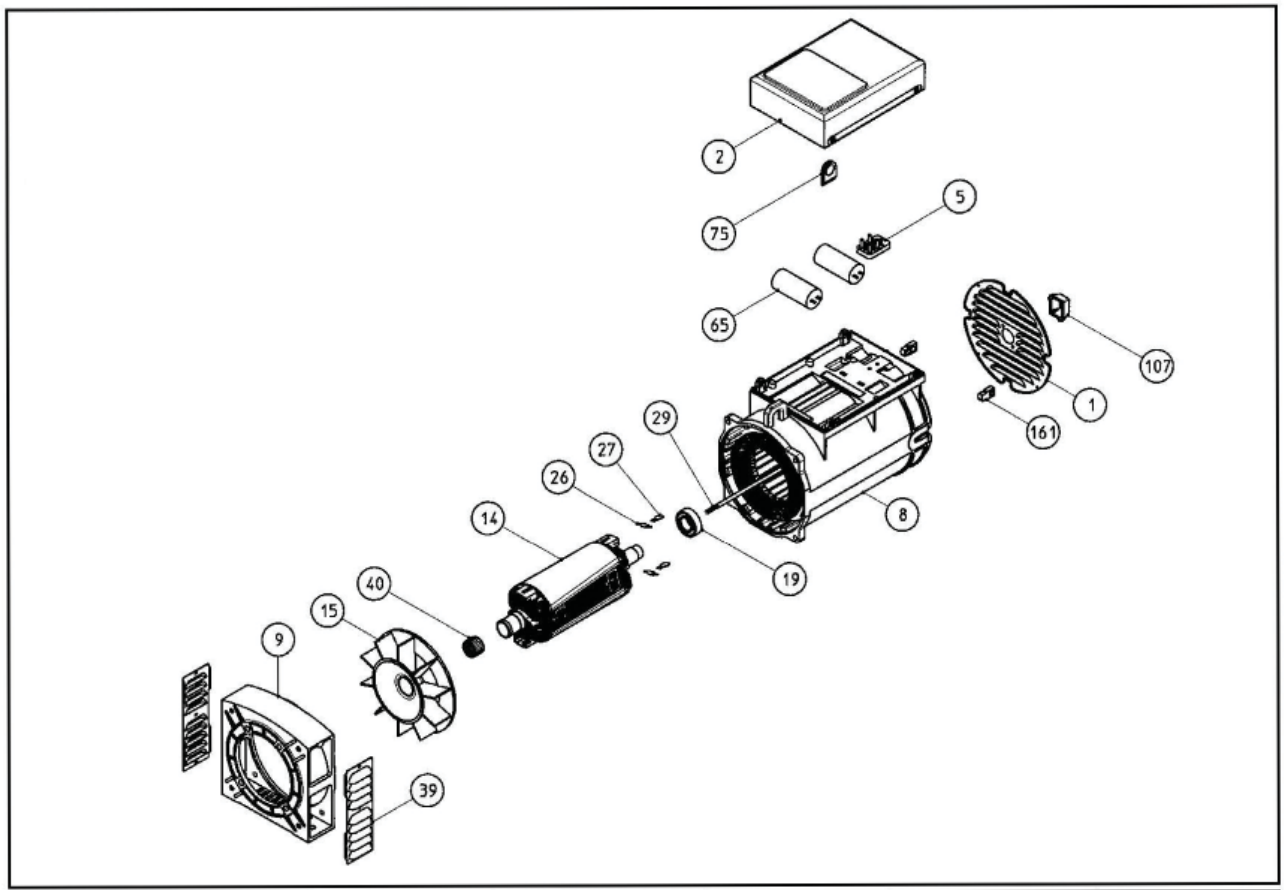

REF #	PART NUMBER	QTY	DESCRIPTION
	351836-1	1	Complete Generator Assembly
65	300323-112	2	Capacitor, 31.5 mf, 425V
26	300323-208	2	Varistor
27	300323-207	2	Diode
19	54665-000	1	Bearing
40	300323-110	1	Tolerance Ring
107	300323-211	1	Rubber Cap

GENERATOR SPECIFICATIONS:

ROTOR	6.57 Ohms
STATOR	0.209 Ohms
CAPACITOR	
LEADS	0.60 Ohms

WIRING DIAGRAM
WL12000HE/H

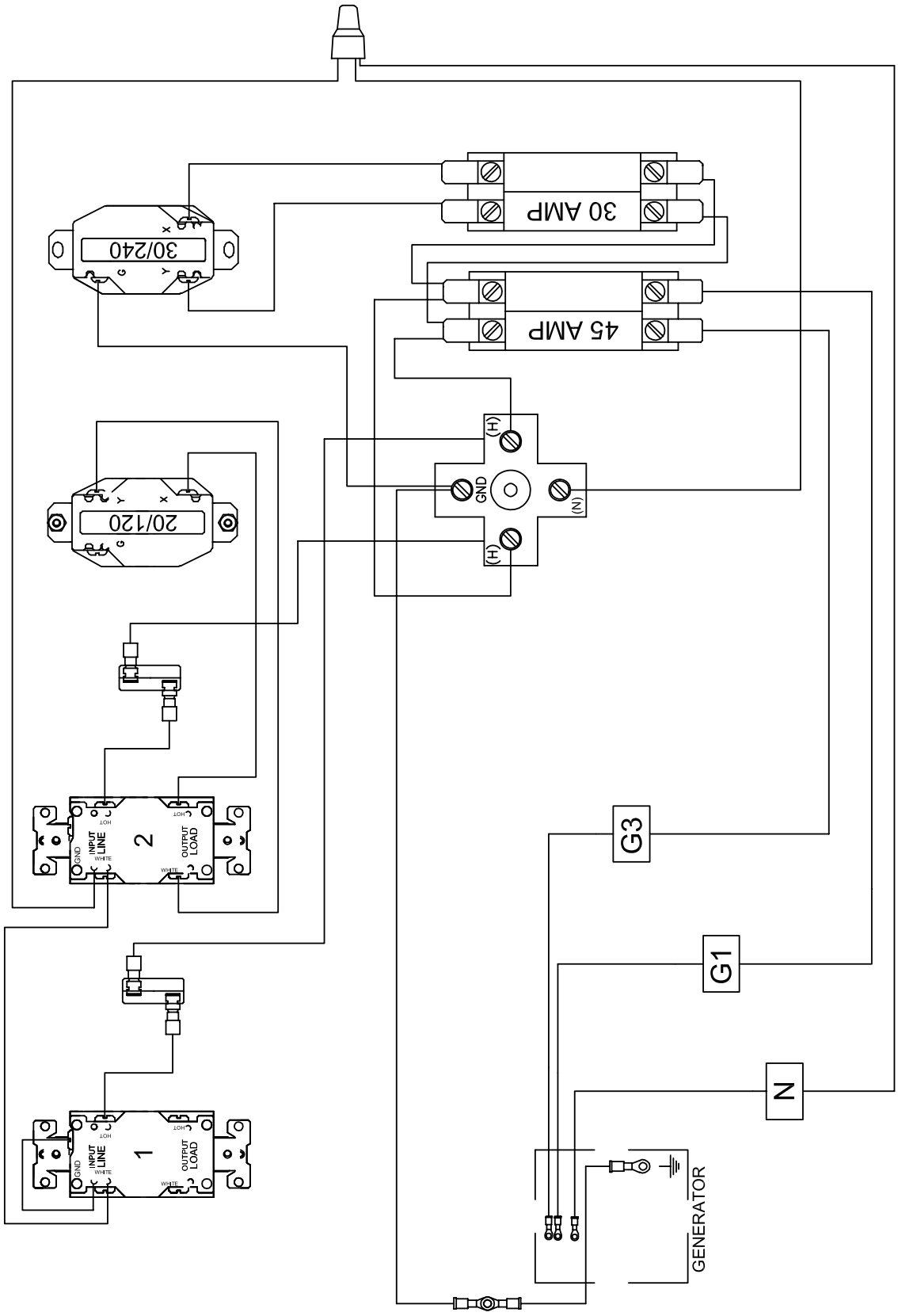
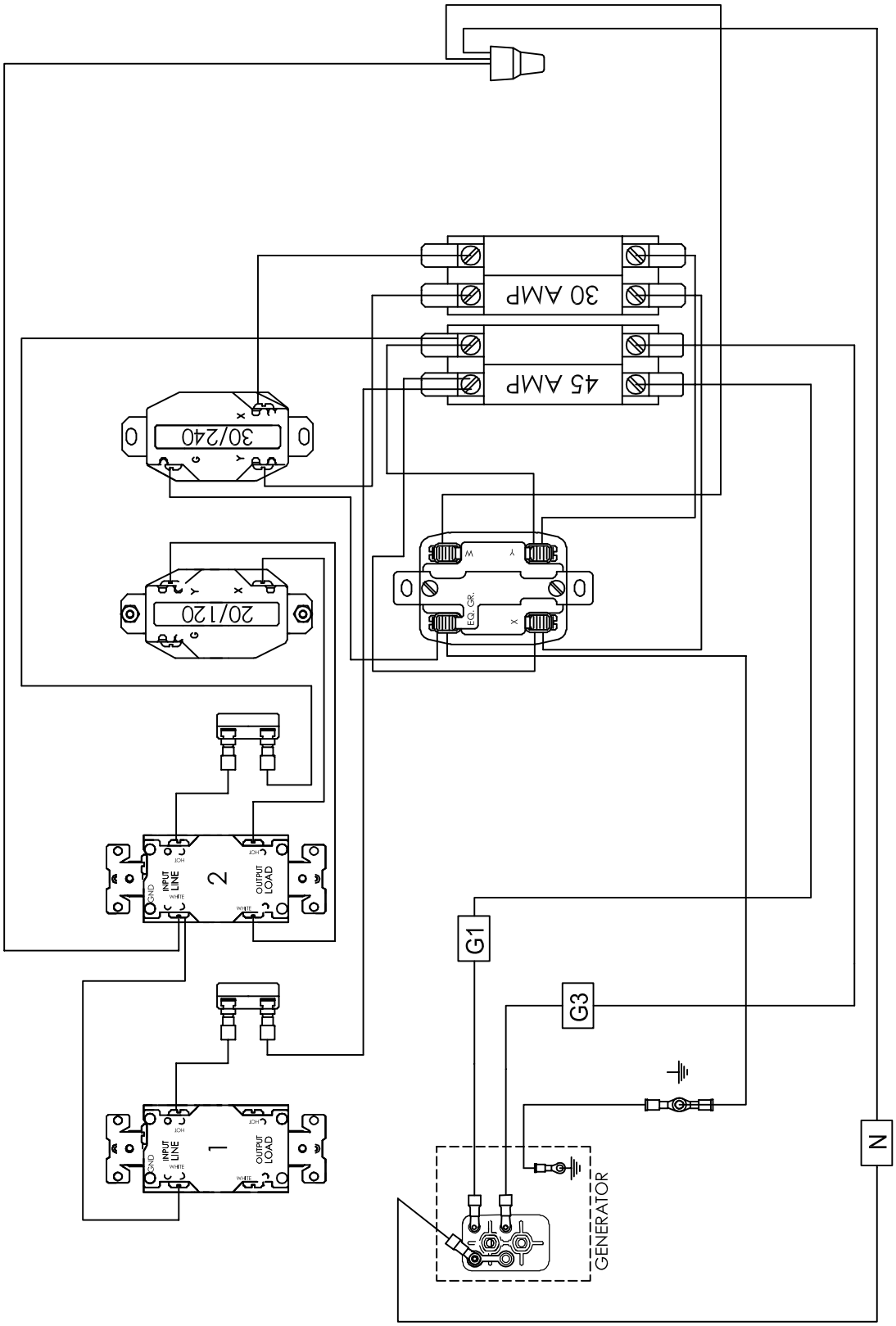
WIRING DIAGRAM
WL12000HE/H (50 STATE)